WIRELESS ENGINEER

Vol. XXVIII JULY 1951 No. 334

Valve Operating Conditions

It is well known that when a cathode-follower has a capacitive load its anode current may be cut off by a negative-going input voltage having an amplitude which is well within the normal handling capacity of the stage in the absence of capacitance. It is not so generally realized that a similar effect can occur in an ordinary amplifying stage without feedback.

Consider the triode stage of Fig. 1. The anode-volts–anode-current characteristics have the form of Fig. 2 in which AB represents the load line corresponding to R_a. Let v_g be -5 V initially so that the operating point is C. Now let a positive-going step of 4-V amplitude be applied to the grid to change v_g to -1 V. If C were absent, the operating point would jump to D. However, C cannot change its charge instantly and so with C present the anode voltage cannot change at once and on the application of the step the operating point jumps from C to E. This current flows mainly in the capacitance and as it discharges the anode current falls, the operating point sliding along the curve for $v_g = -1$ V until the finalpoint D is reached.

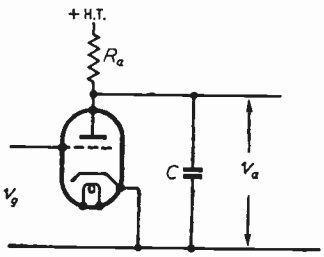

Fig. 1.

As is well known, insofar as the valve curves can be considered as straight, the effective time constant in $Cr_aR_a/(r_a + R_a)$ where r_a is the a.c. resistance of the valve. In practice r_a varies with the operating point and is lower at E than at D, so the time 'constant' itself varies somewhat during the discharging process.

The operating point being D, now let v_g return suddenly to -5 V so that the valve is brought back eventually to its original point C. The grid jumps to -5 V and v_a cannot change instantly; with $v_g = -5$ V and v_a corresponding to point D, anode current is cut-off. The operating point thus becomes F and the valve plays no part in the action; therefore, C charges through R_a with time constant CR_a until v_a reaches point G at which the valve begins to conduct. The point then follows the $v_g = -5$-V curve until C is reached, the time constant falling from CR_a to $Cr_aR_a/(r_a + R_a)$ with r_a continually decreasing.

If the input voltage changes slowly instead of quickly C can change its charge as the input changes and in the limit when the input changes very slowly indeed the operating point tends to keep to the load line. The valve can then handle a 4-V input change whether it is in the positive or negative direction. When the input changes rapidly, however, the valve, like a cathode-follower, can handle a positive-going input but not an equal return to the original grid voltage. In Fig. 2, the maximum negative-going change from D is about 2·5 V only if cut-off is to be avoided.

With a pentode valve the effect does not occur. Typical pentode characteristics are shown in Fig. 3 and the operating path for a positive step input and load line AB is CED and the return for a negative step is DFC. Cut-off does not occur. In this case $r_a \gg R_a$ and the time constant throughout is nearly CR_a.

Suppose, however, that R_a is larger so that the

load line is HJ. The current jumps initially to E and v_a changes, the operating point moving along the $v_g = -1$-V curve, with time constant CR_a until about the point K. Here r_a starts to fall rapidly and so the time constant falls. The voltage then changes more rapidly than the usual exponential law until L is reached.

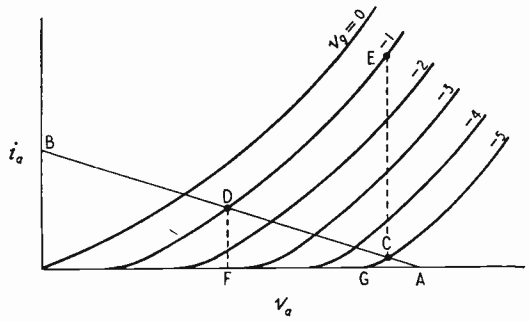

Fig 2.

When v_g is changed back to -5 V the current drops to M and the operating point returns to C along the $v_g = -5$-V curve. The change of r_a along this is much smaller and the time constant is much more nearly CR_a throughout.

With the pentode, symmetrical operation, with a nearly constant time constant CR_a, thus requires that the load line lie to the right of the knee in the curves, like AB. If the load line is to the left of the knee, like HJ, the time constant is variable and the response is asymmetric, so that the leading and trailing edges of a pulse are differently reproduced. There is, of course, also a limiting action for all the curves for voltages more positive than -2 V have coalesced at L. This is the operating condition commonly known as 'bottoming', because the anode voltage drops to a lower limit which is independent of the precise grid voltage.

Trouble can arise in a pentode when the load is inductive, however. Thus in Fig. 3 assume that operation is at C and that the load is a pure inductance. If the grid voltage jumps to -1 V the final operating point is E, but the current cannot change instantly and the back e.m.f. across the inductance rises and the anode voltage drops so that the operating point moves very rapidly to N, the time constant being L/r_a. At N the value of r_a becomes very low and the operating point moves along the -1-V curve from N to E, slowly at first, but more rapidly once the knee of the curve is passed.

The back e.m.f. is limited to the distance between C and N on the voltage scale and it is impossible to effect the change of current from C to E rapidly. Because of this, it is necessary in inductive time bases, such as are used in television receivers, to arrange operation so that the fly-back corresponds to a reduction of anode current. In other words, the input saw-tooth voltage *must* be positive-going on the scan and negative-going on the fly-back.

Reverting to the capacitance circuit, if negative-voltage feedback is applied to the pentode it obviously becomes possible to cut off anode current by lowering the instantaneous anode voltage, for part of the anode voltage is applied to the grid and, if large enough, it will cut off anode current by the action of the grid. Similarly, if feedback is applied from the anode to the screen, anode current can again be cut off by a suitable change of anode voltage. As is well-known, as the feedback is increased the valve curves become more and more like those of a triode.

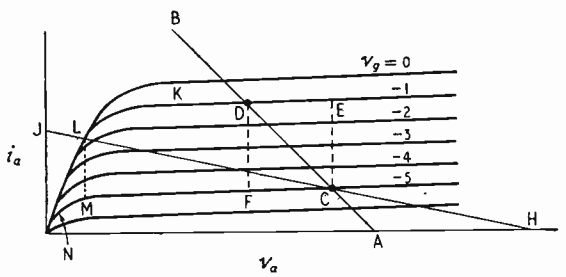

Fig. 3.

It has been said that the triode is really a tetrode (or pentode) with 100% negative feedback applied to the screen-grid. There is considerable justification for this view and it is common practice to employ pentodes as triodes by joining screen and anode. If this view is accepted, one can regard the cut-off effect in a triode with a capacitive anode load merely as another example of a feedback effect. One can regard the pentode as the basic valve type and the triode as a more complex device—a pentode with feedback!

PRECISION CALIBRATOR FOR L.F. PHASE-METERS

By M. F. Wintle, B.A.(Cantab.), B.Sc.(Eng.), A.M.I.E.E.

(*Standard Telephones & Cables Ltd.*)

1. Introduction

IN recent years, several navigational aids have been developed, each involving the measurement of the phase relationship between two alternating voltages of the same frequency. These aids include certain types of automatic direction finder (e.g., the phase modulation type[1]) and some omni-directional beacons (e.g., Luck beacon,[2] the C.A.A. beacon,[3] etc.). Examples requiring a phase measurement exist in many other fields of electrical and radio engineering.

An accurate phase calibrator is therefore required, and it is the purpose of this article to describe such a calibrator. Other methods of calibration already exist but all have a strictly limited accuracy. All depend on accurate mechanical and electrical construction. Furthermore, the accuracy is not easily checked to better than $\pm 1°$ due to the lack of a reference having sufficient accuracy and due to the inherent difficulty of phase measurement. First, there has been no absolute standard of phase difference constructed to date with one known exception.[4] Secondly, even when a standard has been set up and it is required to check the calibrator against it, a measurement of phase is involved and this cannot be performed with sufficient accuracy.

Thus it is necessary to build a calibrator which is fundamentally accurate, so that it does not require to be used with reference to a standard. A simple calibrator of this type has already been constructed independently in America,[4] but that to be described is superior in several respects. It will be appreciated from the following description that its short-term accuracy is unlimited and its long-term accuracy is excellent.

2. Principle of Operation

The calibrator provides two outputs at the required frequency. The phase of one output is fixed and this is termed 'the reference output'. The other output is termed 'the variable-phase output' and the channel producing it is provided with the necessary phase shifter. This is calibrated so that the two outputs can be arranged to have any desired phase difference.

In simple calibrators, the phase shifting is performed at the output frequency, so that the accuracy of any phase shift cannot be greater than the accuracy of the phase shifter itself. However, in the calibrator to be described, the phase shifting is performed at a harmonic of the output frequency, and the output is obtained by frequency division. The reference output is obtained from a second frequency divider for which the input is not shifted in phase. The block schematic diagram is shown in Fig. 1.

The first published reference to the use of harmonics in a related manner[5] referred to the measurement of the phase relationship between two voltages by performing the measurement with the 8th harmonic of one of them. This harmonic was produced by frequency multiplication of one input.

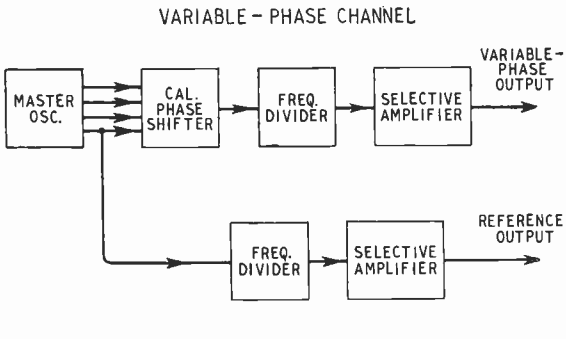

Fig. 1. *Block schematic diagram.*

Referring to the phase calibrator, suppose that the required output frequency is f and the nth harmonic nf is supplied to the phase shifter. An oscillator is set up giving an output at the frequency nf. This is applied to two separate channels. One channel is operated at fixed phase. The other is the variable-phase channel.

The fixed-phase or reference channel consists of one or more frequency dividers having an overall frequency division factor n and produces an output at the required frequency f at constant phase. The output circuits may be selective, if required to give a good waveform.

The variable-phase channel has at its input end a phase shifter whose accuracy need not be great.

MS accepted by the Editor, July 1950

The requirements of this phase shifter are that its output should have an approximately constant amplitude as the phase is varied, that the output should be continuous and that the phase of the output should be correct to an accuracy to be decided later.

The phase shifter is followed by a frequency-divider circuit identical with the one in the complete reference channel.

Suppose that the division factor of each channel is 36. Then an error of phasing in the phase shifter of 3·6° at any setting will give an error in the output phase of 0·1° only. It is clear that increasing the division factor increases the accuracy of the output phase. In fact,

Output phasing error $= 1/n$ (phasing error at the output of the phase shifter).

The most important feature of the method is this. If the shaft of the phase shifter is rotated by exactly 1 revolution from any initial position, so that the output of the phase shifter varies in phase through 360°, then the final output at frequency f varies through exactly $360°/n$ whatever the division factor n. This is a fundamental property of the calibrator, so that it is self-calibrating every $360°/n$.

If n is 36, the phase of the output is exact every 10° and this becomes 1° if n is increased to 360. Such a large division factor is unnecessary, however, because there is a certain initial accuracy in the phase shifter itself. If a square potentiometer[6] or an electromagnetic phase shifter is used and the two-phase input is accurately phased, then the output phase is also as accurate as the construction allows. If the two-phase input is incorrectly phased or the amplitudes are unequal, there is an additional and calculable error. The error need be known only to a first order because it is reduced in order by the frequency-division process. It is also possible, if a resistive phase shifter is to be used, to employ a construction somewhat simpler than that of the square potentiometer. This is described later when it will be shown that a maximum error of 4° is produced. Division by 36 reduces this to 0·11°. However, the simplified phase-shifting potentiometer is still accurate at the four feed points if the input phasing and amplitudes are correct, so that the input phase after division by 36 is accurate at intervals of 2·5°. This is generally sufficient for the calibration of a phase-meter.

The two divider channels are made identical, so that any change of h.t. voltage, etc., affects them equally.

3. Master Oscillator

The frequency of the master oscillator is decided by the division factor and the final frequency required. For omni-directional beacons, the frequency at the phase meter is now generally 30 c/s[8] and for the phase-modulation direction finder the frequency may be up to 100 c/s approximately.[1] It will be considered as an example that the final frequency is to be 30 c/s and the division factor 36. This requires an original frequency of 1080 c/s and this may be produced by an RC oscillator, tuning-fork oscillator, or otherwise. In the apparatus used by the writer the frequency was required to be very accurate and therefore a crystal master oscillator was used. Since crystals operating below 4 kc/s are not readily available, one operating at 4320 c/s was obtained. The output of the crystal oscillator must be divided in frequency by a factor of 4 to give the required input to the calibrator proper. Alternatively the division factor $n = 36$ can be increased to 144 when one revolution of the phase shifter shifts the final phase by 2·5°. However, such a large division factor makes the use of the calibrator laborious.

Quartz crystals in this frequency range are of the four-terminal type and as they are not well known some description is included. The crystals are cut in the form of a bar with four gold electrodes, and if an appropriate pair are joined, the three-terminal network remaining simulates a tapped tuned circuit.

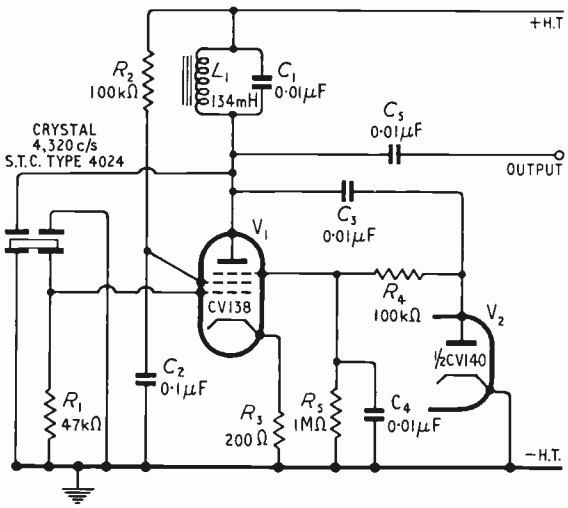

Fig. 2. *Crystal oscillator circuit.*

The crystals can then be connected, for example, in the same way as the tuned circuit in the Hartley oscillator. A precaution is essential, however, in that some form of a.g.c. must be used. The crystals have a high Q and the build-up time is several seconds. Once the crystal begins to oscillate it can do so very violently, and is easily fractured. One maker of these crystals* recommends a 2-valve circuit but the writer has used a single pentode valve circuit of Hartley type with

* Standard Telephones & Cables Ltd.

success (Fig. 2). A circuit tuned approximately to the crystal frequency is used as anode load of V_1 but it may be replaced by a resistance. The alternating anode voltage is rectified by V_2 and used as a.g.c. bias on the suppressor grid. The inclusion of a high resistance R_2 in the screen-grid circuit lowers the screen voltage when the anode current is reduced by the action of the a.g.c., and the latter is made more effective. In addition, the maximum dissipation of the screen grid is not exceeded. The anode current is cut off by a suppressor-grid voltage of about -50 V in an average receiving-type pentode. This corresponds to an alternating anode voltage of about 34 V r.m.s. Therefore, in normal operation, the a.g.c. will cause a stable amplitude to be reached when a voltage of about 25 V r.m.s. appears at the anode.

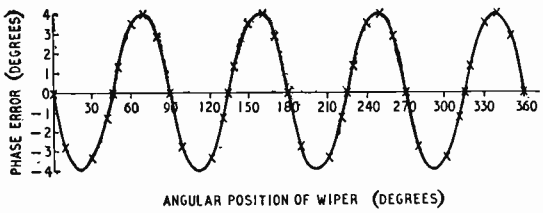

Fig. 3. *Error curve of the round potentiometer phase shifter.*

4. Variable-Phase Channel

4.1. *Main Phase-Shifting Control*

The continuous phase shifter which follows the master oscillator may be of any convenient type such as the Drysdale type phase-shifting transformer (e.g., the Magslip), or a resistive polygonal potentiometer,[6] of which the 'square' potentiometer is a particular case.

However, as already pointed out, the process of frequency division reduces any error in the phase shifter. Thus, depending on the final accuracy required, some inaccuracy can be allowed in the phase shifter. The manufacture of a highly accurate square or polygonal potentiometer is, therefore, not justified and a simpler construction is allowable. The square potentiometer becomes a 'round potentiometer' which is easier to make.[7]

The round potentiometer consists of a circular winding similar to those used in good quality wire-wound potentiometers with the exception that it is an endless toroidal winding. Four taps are made at intervals of 90°. The wiper can be rotated continuously and it is important that the contact should not be intermittent, as explained later. The wiper is associated with a simple revolution counter which is an extension of the Maltese-cross mechanism. This counter divides by the same number as the overall division factor of the electrical frequency dividers, so that the output shaft of the mechanical revolution counter indicates roughly the output phase of the output wave after frequency division.

The revolution counter indicates the number of complete revolutions of the shaft of the wiper and it is marked in 10° intervals from zero through 360° back to the same zero. The position of the shaft of the potentiometer subdivides these 10° intervals and the potentiometer scale is divided into 10 equal divisions, each of which represents 1° change in the final phase. The phase-shifting potentiometer is, therefore, provided with coarse and fine scales.

Whereas the square potentiometer is theoretically perfectly accurate, the round potentiometer is fundamentally inaccurate if a uniform circular winding is used. The error is repetitive and is zero when the position of the wiper corresponds with the four axes of symmetry, if the input phases and amplitudes are correct. There are thus eight zeros in the error curve and the error is termed octantal in the terminology of radio direction finding. The error curve is plotted in Fig. 3, and it will be seen that its amplitude is $\pm 4°$. If a phase-shifter having this error is followed by a frequency divider with a division factor of 36, the maximum error in the final phase due to this cause is $\approx 0{\cdot}11°$.

This is normally satisfactory for the calibration of most phase meters, but it can be reduced if desired in several ways.

(a) By increasing the division factor of the frequency divider.
(b) By feeding the potentiometer at more than four points from a polyphase source.
(c) By using a non-uniform winding.
(d) By using a mechanical correcting device.[7]
(e) By using a square potentiometer or a good phase-shifting transformer.

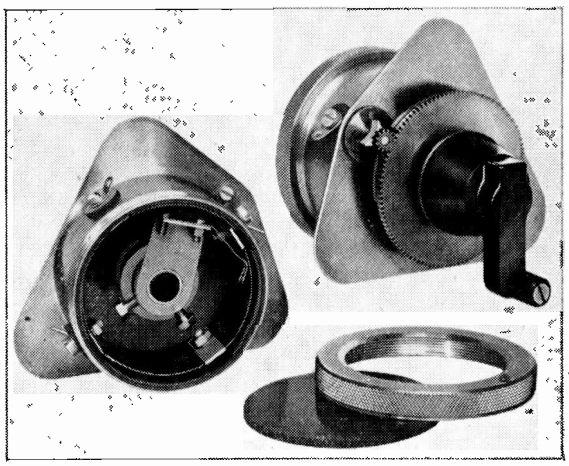

Fig. 4. *The round potentiometer phase shifter.*

Photographs of the round potentiometer are shown in Fig. 4.

The output of the master oscillator is divided into four symmetrical phases, of equal amplitude, and these outputs are applied in order of phase to the taps of the potentiometer, taken in order. As the wiper is rotated, the voltage appearing thereon progresses or retards in phase by an amount equal to the angle of rotation of the wiper. There is a repetitive error of phase as previously mentioned, but a complete revolution from any initial position shifts the output phase by exactly 360°.

The amplitude of the output varies by 3 db as the wiper rotates, as a simple consideration will show, but since the output is to be squared and limited, this is of no consequence.

It has been stated that the output must be continuous. This arises because the output is to be applied to frequency dividers or counters, and an unintentional transient in the applied voltage can cause a counting error. It may be argued that a counting error can cause the final phase to shift only by exact multiples of $360°/n$ and that unless the phase meter under test is very inaccurate, it will indicate what phase slip has occurred. However, this effect is to be avoided, since the coarse scale of the phase-shifting potentiometer will give a false indication, and the calibration of a given phase meter will take longer than it need.

Any slight discontinuity of the output of the phase shifter can be removed by feeding this output to a ringing circuit via a resistance which is sufficiently large to cause negligible load on the potentiometer.

The complete circuit associated with the above description is shown in Fig. 5.

The crystal master oscillator is followed by the frequency divider which provides the correct frequency at the input of the phase-shifting circuit. This frequency divider is not shown, but it can be of any type. It need not be phase-stable since it supplies both output channels. Its output is applied to the transformer T_1, tuned to 1080 c/s by capacitor C_6, to remove harmonics.

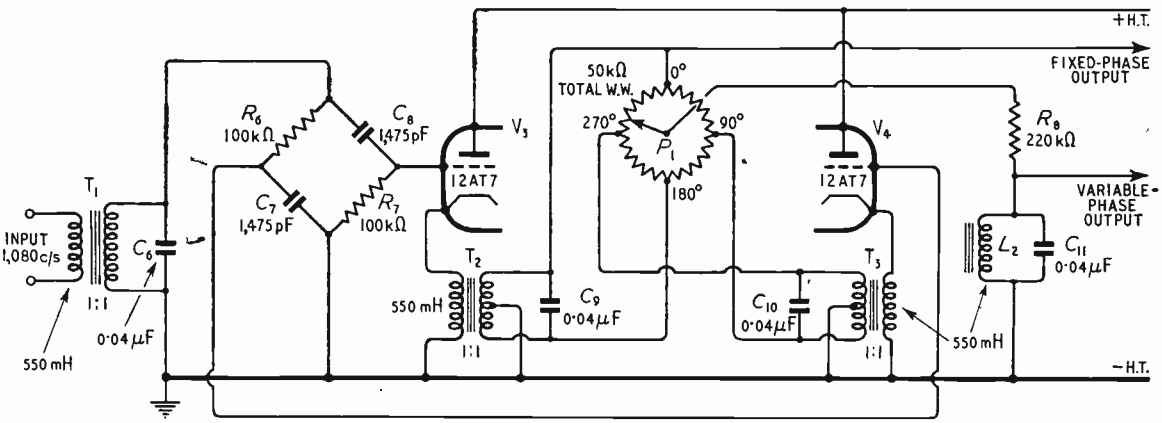

Fig. 5. *The round potentiometer phase-shifting circuit.*

The output phase is shifted by $\pm 45°$, by the phase-shifting bridge R_6, R_7, C_7, C_8, in which the resistances and reactances are all numerically equal. The voltages at the output points are applied to the grids of two cathode-followers V_3 and V_4. The cathode loads are two transformers T_2 T_3 having the secondary centre-taps earthed. The four output leads then represent a symmetrical 4-phase system, and the leads are joined in phase-order to the taps of the main phase-shifting potentiometer P_1.

Two outputs are taken to high impedance circuits, one from a feed point of P_1, and one from the wiper. The output from the wiper is applied via R_8 to the ringing circuit L_2, C_{11}, tuned to 1080 c/s.

R_8 is large compared with the component resistances of P_1. Also the impedance of the ringing circuit is comparable with R_8. The variable phase output is taken from the ringing circuit.

A changing phase-shift in the ringing circuit can cause an error of the output phasing. However, since the Q of the ringing circuit need not be greater than five when in circuit, such accidental phase-shifts will be small. It is clearly preferable to eliminate the need for the ringing circuit by making the output of the phase-shifter perfectly continuous.

4.2. *Amplifier and Squarer*

The crystal oscillator is followed by a two-stage amplifier and squarer (V_5, V_6, Fig. 6). This produces at the anode of the 2nd stage, a square wave whose peak to peak voltage is a large fraction of the h.t. voltage.

4.3. *First Frequency Divider* (1080 c/s to 180 c/s)

A modification of the familiar stepping counter[9] has been found to be a very stable frequency divider, but it is not as economical in valves as some other types. In the calibrator which gave rise to this article, stepping counters are used throughout.

The original stepping counter operates as follows, with reference to Fig. 6. A fall in voltage at the anode of V_6 causes C_{13} to charge through the left-hand diode of V_7. When the voltage rises, C_{13} loses some of its charge through the right-hand diode to the reservoir C_{14}. The voltage across C_{14} is therefore of 'staircase' form as time progresses, and the envelope is exponential, as shown in Fig. 7. The anode voltage of the thyratron is therefore raised and at some point, depending on the grid bias, and, assuming C_{15} disconnected, it will fire. The reservoir capacitor is then discharged and the process repeats.

diode V_8. The cathode of V_8 is biased positively by means of R_{14} and P_2. When the voltage across C_{14} exceeds this bias voltage, the diode conducts, and its cathode voltage is raised. This rising voltage is applied via C_{15} to the thyratron grid and causes it to fire. Since this voltage is of the same order as that which causes anode triggering of the thyratron in the simple circuit, the operation is clearly more certain.

Since both the peak voltage of the input square wave and the diode bias voltage are proportional to the h.t. voltage, the operation of the circuit is unaffected by changes of h.t. voltage over a wide range. In addition, changes of ambient temperature cannot affect the operation since the thyratron does not fire naturally, but is triggered by pulses from an independent circuit.

The division factor can be controlled over a small range by adjusting P_2. Wider variation may require alteration of the values of C_{13} and C_{14}. The calculation of the actual values required for a

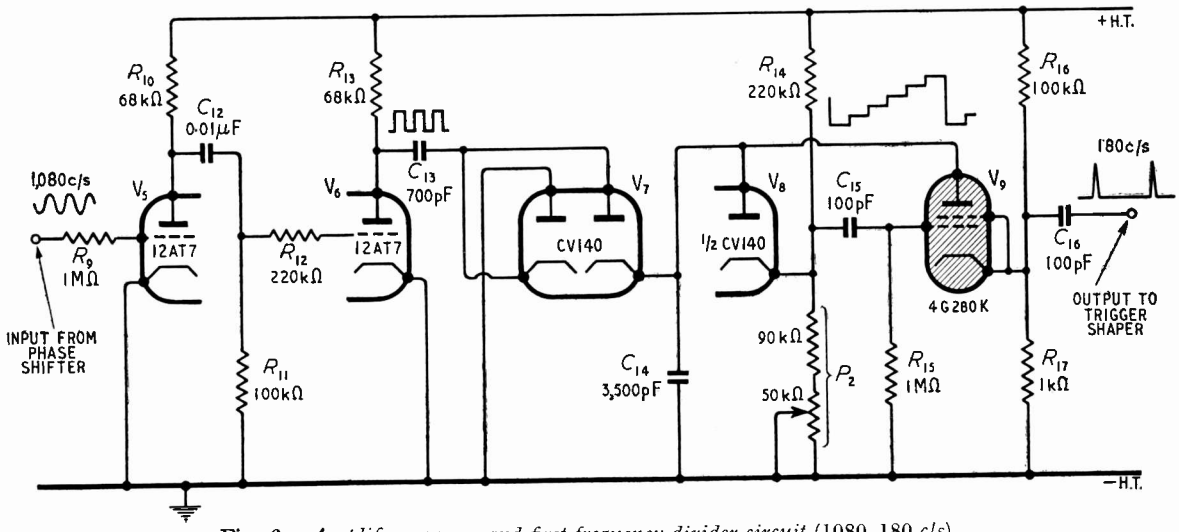

Fig. 6. *Amplifier squarer and first frequency divider circuit* (1080–180 *c/s*).

The division factor is decided by the grid bias of the thyratron and by the ratio C_{14}/C_{13}. Thyratrons are not perfectly stable, however, and the voltage required at the anode to cause firing will vary with the h.t. voltage and the ambient temperature, etc. This causes variations of the division factor, except when this is small.

By adding a simple diode gate circuit, the counter can be made very stable for any ambient temperature and for a 2 : 1 ratio of the h.t. voltage. The components to be added are V_8, R_{14}, P_2 and C_{15}.

The thyratron is biased at the cathode by means of R_{16}, R_{17}, so that it cannot fire within the expected range of its anode voltage. The voltage across the reservoir C_{14} is applied to the anode of

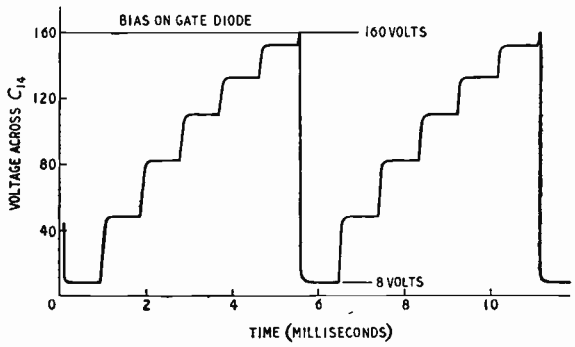

Fig. 7. *The graph of the voltage across C14.*

given circuit is covered in detail in the Appendix. The values required for this circuit are deduced as an example.

When the thyratron is triggered, a large positive pulse of short duration appears across the cathode-bias resistor. This pulse is used as input to the following circuits.

sinusoidal. The output from the second divider must therefore be tuned up to remove harmonics and the output waveform of the divider should therefore contain a large fundamental component. The 'staircase' waveform across the reservoir capacitor C_{20} is most suitable for this purpose. Direct connection to C_{20} is undesirable and con-

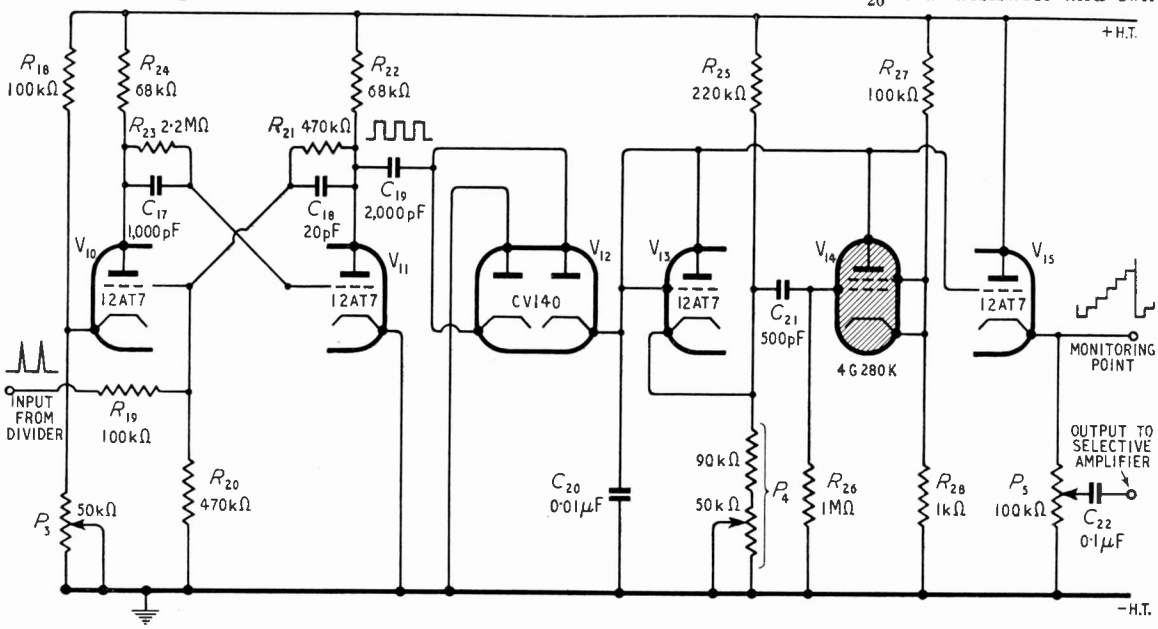

Fig. 8. *Trigger pulse shaper and second frequency-divider circuit* (180-30 *c/s*).

4.4. *Pulse-shaping Trigger Circuit*

Two frequency dividers are to be used in cascade to give a division factor of 36. The second divider also requires a square-wave input. At no point in the circuit of the first divider does such a waveform exist, so that a shaping circuit is required. A single-stability multivibrator circuit consisting of V_{10}, V_{11} is used and is shown in Fig. 8. It is designed to convert the short positive pulses at the cathode of the thyratron into a square wave of approximately unity on/off ratio and having the largest possible amplitude. The repetition frequency is 180 c/s. The circuit requires no adjustment when it is once correctly set up. The output is taken from the anode of V_{11}.

4.5. *Second Frequency Divider* (180 c/s to 30 c/s)

The output of the trigger shaper is applied to the second frequency divider (Fig. 8). This is identical with the first except that the charging and reservoir capacitances C_{19} and C_{20} may be increased by a factor not exceeding 6, since the input frequency is less in this ratio.

4.6. *Output Cathode Follower and Gain Control*

Most phase meters of the type under consideration require the two applied voltages to be

nection is made via a cathode follower V_{15} (Fig. 8). This requires no grid leak resistor and it has an almost infinite input impedance. A large cathode resistance P_5 must be used to eliminate grid current, since the voltage between the grid and ground rises to half the h.t. voltage approximately.

The presence of the cathode follower also provides the divider with a low impedance monitoring point. In addition, it is an advantage when setting up the calibrator to provide the first frequency divider with a similar monitoring facility.

The cathode load of the output cathode follower is a potentiometer P_5 which acts as a gain control.

4.7. *Selective Amplifier*

Harmonics may be removed from the output of the cascaded divider circuits by means of normal LC-tuned circuits. However, at these low frequencies, physically-large iron-cored inductors with large inductances are required, and, in any case, these do not make satisfactory tuned circuits. This is because the presence of iron in the circuit produces harmonics, due to hysteresis, and a change of any steady current carried by the windings produces a change of inductance. The

inductance varies rapidly with change of level. Also mechanical shocks can move the core and alter the inductance, particularly if the core is gapped.

Due to these disadvantages experience has shown that iron-cored inductors are to be avoided where constancy of phasing is required, except where the inductor is used as the cathode load of a cathode follower or is fed by any other low-impedance source.

The calibrator under discussion uses an amplifier which is made selective by the inclusion of a frequency-selective RC circuit in the feedback loop. The amplifier is a simplification of published circuits.[10,11]

The voltage appearing at the output of cathode follower V_{15} is applied to a potentiometer pad consisting of R_{29} and R_{30} (Fig. 9). The voltage appearing across R_{30} is applied to a cathode follower V_{17}, whose output is applied to a twin-T selective circuit consisting of C_{25}, C_{26}, C_{27}, R_{33}, R_{34} and R_{35}. This is very accurately adjusted to give zero output at the fundamental frequency. The output of this circuit is applied to the grid of a pentode valve V_{16} operating as a high-gain voltage amplifier, and having R_{30} as anode load. V_{16} does not modify the voltage of fundamental frequency appearing across R_{30}. However, harmonic voltages appearing across R_{30} produce heavy negative feedback, since the twin-T network gives an output at all frequencies except the fundamental. Thus the whole circuit is selective and the selectivity depends upon the voltage loss of the cathode follower, the loss of the twin-T network and the gain of the feedback amplifier.

Comprehensive information about this type of selective amplifier is given in the original articles, but some design notes will be given. The twin-T circuit must be fed from an impedance which is low compared with its component impedances, and it must be terminated with a very high-load impedance. The impedances in the series arms should be double those in the shunt arm. The circuit must be constructed with stable resistors and capacitors, and must be very accurately tuned by varying, for example, R_{33} and C_{27}. To obtain good selectivity, the voltage gain of V_{16} must be at least 100 times, a requirement which is easily satisfied. The selectivity may be varied by varying this gain.

4.8. *The Phase-setting Control*

The sinusoidal output of the cathode follower V_{17} is applied to a bridge circuit consisting of C_{29}, R_{37}, C_{30}, R_{40}, etc. The potentiometer P_6 allows small phase adjustments to be made. This is a useful facility in setting up the calibrator.

4.9. *The Output Stage*

The output of the phase-shifting bridge is applied to a cathode follower V_{18}, which acts as an output stage. The cathode load is a transformer T_4 tuned to the fundamental frequency. It will be appreciated that this tuned circuit is not selective owing to the low output impedance of the cathode follower. The reason for tuning is to raise the impedance of the transformer at the fundamental frequency and make negligible the phase shift between grid and cathode voltages. The transformer has an appropriate secondary winding to give a convenient output voltage.

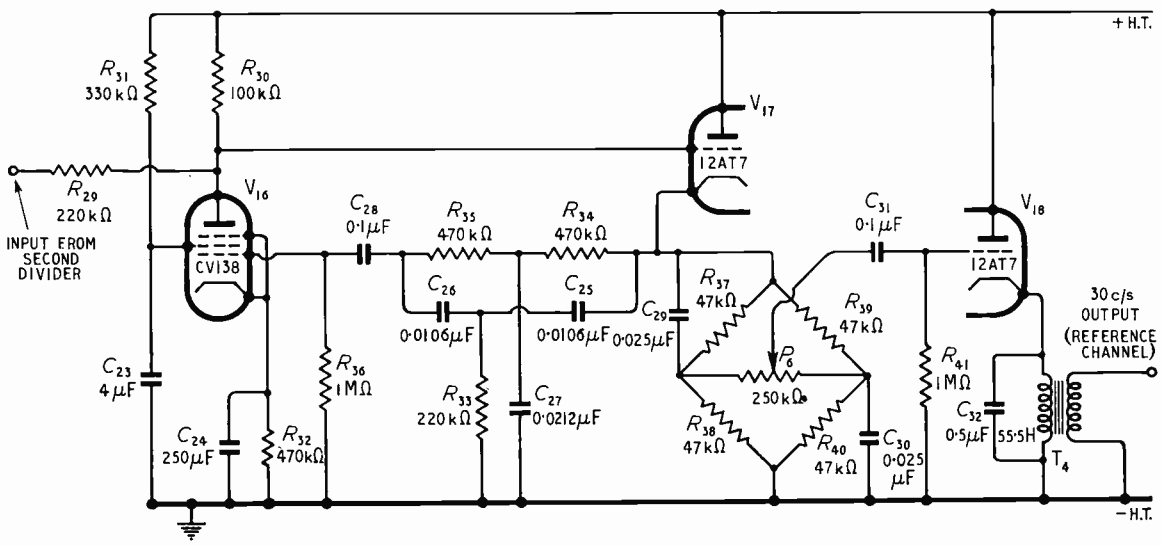

Fig. 9. *The 30-c/s selective amplifier and output stage.*

5. Fixed-phase Channel

The fixed-phase channel is identical with the variable-phase channel, with two exceptions. The input is obtained at constant phase, as indicated in Figs. 1 and 5; i.e., is not obtained via the round-potentiometer phase shifter. The phase-setting control P_6 and the associated bridge circuit are omitted.

7. Panel Controls

In the calibrator under discussion, it has been found desirable to have the following controls brought out to knobs.

(1) The 'round potentiometer' phase shifter.
(2) The gain control for each channel.
(3) The subsidiary phase shifter giving a few degrees phase shift for setting the zero of the calibrator.
(4) An output switch with the following positions:—
  (a) Zero output from both channels.
  (b) Zero output from the reference channel.
  (c) Zero output from the variable-phase channel.
  (d) Both outputs connected normally.
  (e) The reference channel connected to both pairs of output terminals.

It is also desirable to have five preset controls brought out for screw-driver adjustment. Each control is associated with a frequency-divider circuit and the monitoring point of each divider is connected to a small terminal on the panel of preset controls. A lead is also taken from the master oscillator to a terminal on this panel.

The five preset controls and the six monitoring points are concealed behind a small cover which is removable. These controls are required only infrequently.

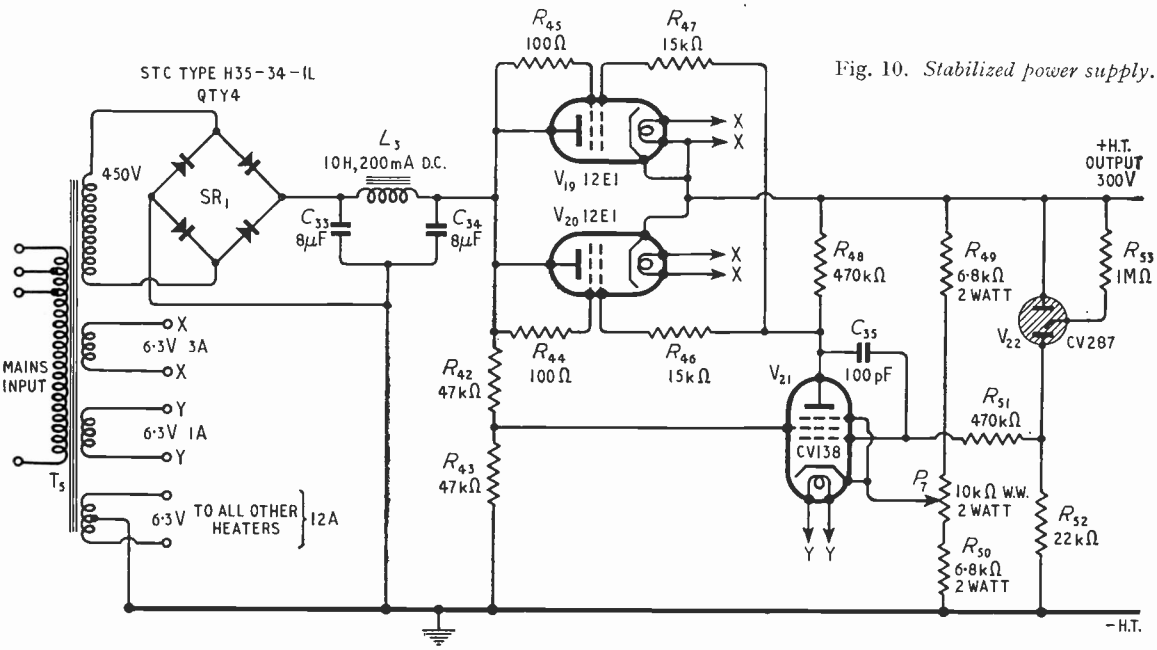

Fig. 10. *Stabilized power supply.*

6. Power Supply

Although the frequency-divider circuits described previously are not affected by change of h.t. voltage, a stabilized power supply is desirable. The final divider and output circuits produce, in the h.t. supply, currents at 40 c/s. Any normal power-pack with filter circuits consisting of inductors and capacitors has an appreciable internal impedance at 40 c/s. This causes interaction between the two channels and a semi-circular repetitive error is produced in the output phase difference. A power supply which is stabilized electronically can be made to have negligible or even zero internal impedance at low frequencies. In this case there is no coupling between the two channels due to this cause, and a suitable circuit is shown in Fig. 10. An alternative solution is to use two separate power supplies for the two channels.

It should be mentioned that a semi-circular repetitive error in the output phase difference can also be produced if there is any magnetic coupling between the two output transformers of the two channels, and these transformers must be placed accordingly.

8. Operation of the Calibrator

It will be appreciated from the preceding description that the calibrator does not provide an

accurate absolute phase difference, but an accurate change of phase difference. This defect is usually unimportant, for most phase meters are provided with a built-in zero check. It is then only necessary to check the scale for linearity.

Alternatively, using the output switch described in Section 7, the following procedure may be adopted. Using switch position (e), a common input is applied to both channels of the phase-meter under test. The phase-meter reading is noted. The main phase-control of the calibrator is set to zero, and the output switch is set to position (d) for normal operation. The phase-setting control (Section 4.8.) is then adjusted until the phase-meter gives the same reading as before. The phase-zero of the calibrator is then set, and the phase-setting control is locked in this position. In these two tests, the amplitude of the input to a given channel of the phase-meter must be the same. Then, the phase-meter acts only as a transfer indicator and introduces no error, since it is working under identical conditions in the two tests.

It may be found convenient to build into the calibrator a simple phase discriminator which can be used in the zero-setting procedure. This has not been done in the equipment described.

A slight modification of the round potentiometer provides for more rapid checking of phase-meters at a number of discrete readings. The four tapping points of the potentiometer are internally connected to four small metal plates. These are arranged so that even if the wiper is not positioned accurately to line up with a tapping point, it still makes electrical contact with the tapping point; i.e., the tapping point is extended along the line of motion of the wiper. By this means, it is not necessary to ensure that the wiper is set exactly to correspond with a tapping point, and the speed of operation is increased. It will be obvious that the phasing error of the potentiometer at intermediate points will be increased. However, if spot checks at intervals of 10° or 2·5° prove sufficient, then this modification is allowable, since these spot checks are obtained with the wiper set to correspond with the four tapping points only.

This modification may be carried a stage further, with the latter proviso. The phase-shifting potentiometer may be replaced by an eight-position rotary switch, in which the rotor can rotate continuously. The distributed resistive winding of the round potentiometer is replaced by a ring of eight lumped equal resistances connected between the eight contact points of the switch. This crude potentiometer is fed at four symmetrical points as before. The wiper must make continuous contact with the studs, so it is necessary for it to short-circuit adjacent studs as it crosses from one to the next. It is for this reason that eight, and not four, resistances and studs are used. As the wiper rotates, the output phase advances in steps. However, the phase is correct at the four feed points and this is all that is required if the calibrator is to be used to provide spot checks only.

9. Conclusions

A calibrator which was constructed in the manner described has proved highly successful and has been in frequent use for one year. It has proved invaluable in the investigation of a phase-meter of the differential detector type.

The principle of operation at a harmonic frequency is general, and has a number of important applications. As an illustration, the method of phase-measurement using a harmonic frequency may be mentioned again.[5] Suppose a system involves a phase-measurement. The phase-measurement may be performed at the fundamental frequency, in which case the accuracy is not large. Harmonic frequencies may be generated and these may be used in the phase-measurement. However, whether this will give any improvement in accuracy is doubtful, for, although the accuracy of the phase-measurement itself is increased, the frequency-multiplication process may introduce serious errors. The remedy is to design the system as a whole so that it generates the harmonic frequencies inherently. This principle has already been applied successfully, in the design of omni-directional beacons.

Acknowledgments

Acknowledgments are due to Mr. C. W. Earp for the original idea, to Mr. H. W. Hawkes for assistance with the experimental work, and to Mr. T. J. Cox who was responsible for the design and construction of the complete phase-shifting potentiometer.

REFERENCES

[1] C. W. Earp and R. M. Godfrey, "Radio Direction Finding by the Cyclical Differential Measurement of Phase," *J. Instn elect. Engrs*, 1947, Vol. 94, Pt. IIIA, p. 705.

[2] D. G. C. Luck, "An Omni-directional Radio Range System," *RCA Review*, July 1941, Vol. 6, No. 1, p. 55; Jan. 1942, Vol. 6, No. 3, p. 344; March 1946, Vol. 8, No. 1, p. 24.

[3] D. M. Stuart, "Omni-directional Range," *Aero Digest*, June 15, 1945, Vol. 49, p. 76. Also C.E.R.C.A. Conference, paper No. 12. C.S.R.D.6279 Cruft paper No. 19

[4] E. Kasner, "Incremental Phase-splitter," *Electronics*, July 1949, Vol. 22, No. 7, p. 94.

[5] S. Baynes and A. Barnett, "Cathode-ray Phasemeter," *Electronics*, Jan. 1938, p. 24.

[6] R. F. Cleaver, "Note on a Short-range Position-Finding System using Modulated Continuous Waves," *J. Instn elect. Engrs*, 1947, Vol. 94, Pt. IIIA, p. 984 (Appendix).

[7] J. E. Bryden, "Resistive Phase Shifters," *Electronic Engineering*, Sept. 1949, p. 322.

[8] Recommendation by the International Civil Aviation Organisation Communications Division, 3rd Session.

[9] P. Emmerson and A. Watson, "1000 c/s Synchronous Clock," *J. Sci. Instrum.*, Feb. 1947. Also see Appendix.

[10] J. M. Sturtevant, "Stable Selective Audio Amplifier," *Rev. Sci. Instrum.*, 1947, Vol. 18, p. 124.

[11] R. W. Wild, "Electrical Measurement of Pressure and Strain," *J. Instn elect. Engrs*, 1948, Vol. 95, Pt. II, p. 733.
[12] E. L. Kent, "The Use of Counter Circuits as Frequency Dividers," *J. acoust. Soc. Amer.*, Jan. 1943, Vol. 14, p. 175.
[13] A. V. Bedford and J. P. Smith, "A Precision Television Synchronising Signal Generator," *RCA Review*, July 1940, Vol. 5, p. 51.

APPENDIX

Calculation of the Component Values for Frequency Dividers[12,13]

The relevant section of Fig. 6 is reproduced in Fig. 11. The charge and discharge sections of V_7, will be called V_{7C} and V_{7D}.

Since the square-wave input is applied via capacitor C_{13}, the d.c. level of the input voltage is unimportant. It will be assumed, for simplicity, that the input square-wave has zero voltage initially, and that it reaches a steady voltage $-E$ on alternate half-cycles.

The discharge of C_{14} by the thyratron is incomplete, and C_{14} remains charged to a voltage v. Initially, C_{13} will not be charged, but at the commencement of subsequent cycles of the 'staircase' waveform, it will have some charge. This latter case will be considered.

Initial state. Input voltage $= 0$
Charge on $C_{13} < C_{13} \cdot E$
Charge on $C_{14} = C_{14} \cdot v = q$

1st negative half-cycle, Fig. 11(b).

The input voltage falls to $-E$. V_{7C} conducts and acts as a low resistance. C_{13} therefore acquires a charge $C_{13} \cdot E = Q$, in the sense shown.

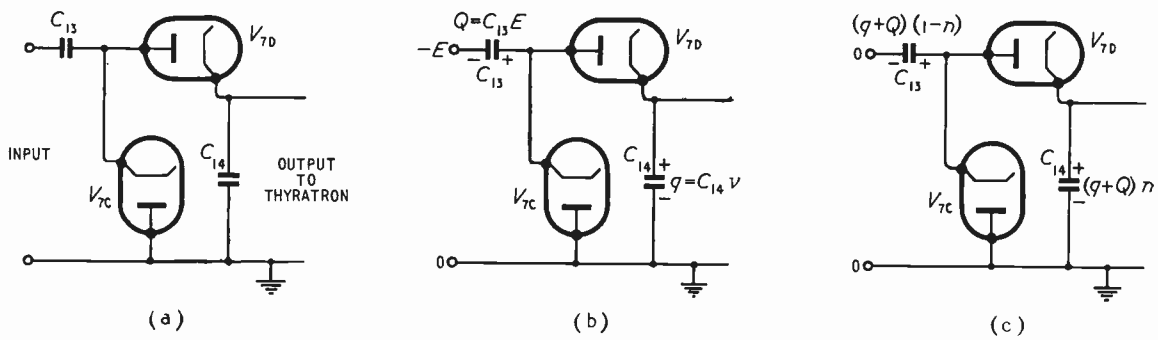

Fig. 11.

1st positive half-cycle, Fig. 11(c).

The input voltage rises to zero and V_{7D} conducts. The input circuit and V_D act as resistances only. C_{13} and C_{14} therefore share their charges until they reach equal voltages; i.e., the total charge divides in the ratio of the capacitances.

Total charge $= Q + q$

$$\text{Charge on } C_{14} = (Q + q)\frac{C_{14}}{C_{13} + C_{14}} = (Q + q).n$$

$$\text{where } n = \frac{C_{14}}{C_{13} + C_{14}}$$

$$\text{Voltage across } C_{14} = e_1 = \frac{(Q + q)n}{C_{14}}$$

2nd negative half-cycle

The charge on C_{13} is made up to Q when V_{7C} conducts.

2nd positive half-cycle

The charges are shared.

Total charge $= Q + nQ + nq$

Charge on $C_{14} = (Q + nQ + nq)n$

Voltage across $C_{14} = e_2 = (Q + nQ + nq)\, n/C_{14}$

3rd negative half-cycle

The charge on C_{13} is made up to Q.

3rd positive half-cycle

The charges are shared.

Total charge $= Q + nQ + n^2Q + n^2q$

Charge on $C_{14} = (Q + nQ + n^2Q + n^2q)n$

Voltage across $C_{14} = e_3 = (Q + nQ + n^2Q + n^2q)n/C_{14}$

pth positive half-cycle

It is now clear that during the pth positive half-cycle, C_{14} will have a charge:

$(nQ + n^2Q + n^3Q + \ldots \text{ to } p \text{ terms}, + n^p.q)$

Voltage across $C_{14} = e_p =$

$$\frac{(nQ + n^2Q + n^3Q + \ldots \text{ to } p \text{ terms} + n^pq)}{C_{14}}$$

Completion of the Cycle

The thyratron is triggered during the rise of a step (i.e., during a positive half-cycle of the input square-wave) when C_{13} has already lost to C_{14} some of its charge $C_{13}.E$.

The thyratron discharges C_{14} to a voltage v, so that the initial conditions are regained. The cycle repeats.

If C_{14} is not discharged, but continues to be charged, its final voltage can be found thus:

Voltage across C_{14} after p steps $= e_p$

$$= \frac{nQ + n^2Q + n^3Q \ldots \text{ to } p \text{ terms} + n^p.q}{C_{14}}$$

Since $n < 1$, $n^p \rightarrow 0$ as $p \rightarrow \infty$

$$\therefore \text{ Sum to infinity} = \frac{Q}{C_{14}}\frac{n}{1 - n}$$

$$= \frac{C_{13}E}{C_{14}} \cdot \frac{C_{14}}{C_{13} + C_{14}} \cdot \frac{C_{13} + C_{14}}{C_{13}} = E$$

i.e., the voltage across C_{14} rises to the peak-to-peak voltage of the input square-wave.

Height of the pth Step

$$e_p = \frac{(nQ + n^2Q + n^3Q + \ldots \text{ to } p \text{ terms}, + n^pq)}{C_{14}}$$

$$e_{p-1} = \frac{(nQ + n^2Q + n^3Q + \ldots \text{ to } p - 1 \text{ terms}, + n^{p-1}q)}{C_{14}}$$

$$\therefore e_p - e_{p-1} = \frac{1}{C_{14}} \cdot [Qn^p - qn^{p-1}(1 - n)]$$

Substituting for Q and q in terms of E and v

$$e_p - e_{p-1} = \frac{C_{13}\,En^p}{C_{14}} - \frac{C_{14}\,v\,n^{p-1}\,.\,(1-n)}{C_{14}}$$
$$= E\,(1-n)\,n^{p-1} - v(1-n)n^{p-1}$$
$$= (E-v)\,(1-n)n^{p-1}$$

Therefore, the heights of successive steps are in geometric progression, so that the envelope of the charging curve is exponential.

Height of the first step $= (E - v)\,(1 - n)$

This shows the physical significance of n. Initially, the voltage across C_{14} is v, and after an infinite uumber of steps, the voltage is E. Therefore, the complete staircase waveform extends over a voltage range $(E - v)$. Thus $(1 - n)$ is the height of the first step expressed as a fraction of $(E - v)$, and n is the fractional height remaining, to be occupied by the charging curve after an infinite number of steps.

Condition for the Height of the p*th Step to be a Maximum*

If the thyratron is to fire during the pth step, greatest stability of operation is obtained when this step has maximum height.

$$\therefore \frac{d}{dn}(e_p - e_{p-1}) = 0$$
$$= (E-v)\,[(1-n)(p-1)n^{p-2} - n^{p-1}]$$
$$\therefore p - 1 - np + n - n = 0$$
$$\therefore n = \frac{p-1}{p}$$
$$\therefore 1 - n = \frac{1}{p} = \frac{C_{13}}{C_{13} + C_{14}}$$

Therefore, to make the height of the pth step a maximum, the fractional height of the first step must be $1/p$. Then—

Max. height of the pth step $= (E - v)(1 - n)n^{p-1}$

$$= (E-v)\,\frac{1}{p}\left(\frac{p-1}{p}\right)p - 1$$
$$= (E-v)\,\frac{(p-1)^{p-1}}{p^p}$$

Bias Required on the Gate Diode

When the circuit is correctly adjusted to have a division factor p, the thyratron is triggered when the mid-point of the pth step is reached. To find the voltage across C_{14} corresponding to this point, it is necessary to know the voltage across C_{14} after the $(p - 1)$th and pth steps.

Voltage across C_{14} after p steps $= e_p$

$$= \frac{(nQ + n^2Q + n^3Q\ ..\ \text{to } p \text{ terms} + n^pq)}{C_{14}}$$
$$= \frac{nC_{13}E}{C_{14}}\,(1 + n + n^2 + n^3 + \ldots \text{to } p \text{ terms}) + \frac{n^pC_{14}v}{C_{14}}$$
$$= nE\,\frac{(C_{13} + C_{14} - C_{14})}{C_{14}}\,\frac{(1-n^p)}{1-n} + n^pv$$
$$= nE\left(\frac{1}{n} - 1\right)\cdot\frac{(1-n^p)}{1-n} + n^pv$$
$$= E\,(1 - n^p) + n^pv$$
$$= (E-v)(1-n^p) + v$$

The pth step is to have maximum height.

$$\therefore n = \frac{p-1}{p}$$
$$\therefore e_p = (E-v)\left[1 - \left(\frac{p-1}{p}\right)^p\right] + v$$

Similarly—

$$e_{p-1} = (E-v)\left[1 - \left(\frac{p-1}{p}\right)^{p-1}\right] + v$$

At the mid-point of the pth step—

Voltage across $C_{14} \times \frac{1}{2}(e_p + e_{p-1})$

$$= \frac{E-v}{2}\cdot\left[2 - \left(\frac{p-1}{p}\right)^p - \left(\frac{p-1}{p}\right)^{p-1}\right] + v$$
$$= \frac{E-v}{2}\cdot\left[2 - \frac{(p-1)^{p-1}(p-1+p)}{p^p}\right] + v$$

If a modern thyratron, having a large control ratio, is used then the triggering pulse required is very small, and can be neglected. With this approximation, the above equation also represents the bias required on the gate diode.

$\therefore$ *Bias required on the gate diode* =

$$v + (E-v)\left[1 - \frac{(p-1)^{p-1}(2p-1)}{2p^p}\right]$$

The first frequency divider of the calibrator will be considered as an example.

C_{13} must be capable of charging and discharging fully in a time equal to the half-period of the input square-wave. Neglecting the differential anode resistances of the diodes V_{7C} and V_{7D}, the larger resistance involved in the time constant is the anode load R_{13} of the second squaring valve V_6, and is obtained when V_6 is non-conducting.

Source resistance $R_{13} = 68$ kΩ

Input frequency = 1080 c/s

Half-period of input square-wave = 463 μsec

Suppose the time-constant $C_{13}R_{13}$ is 10% of this half-period

$$C_{13}R_{13} = 0{\cdot}1 \times 463 \times 10^{-6} = C_{13} \times 68 \times 10^3 \text{ sec}$$
$$\therefore C_{13} = 680 \text{ pF}$$

The division factor $p = 6$

$$\frac{1}{p} = \frac{C_{13}}{C_{13} + C_{14}}$$
$$\therefore p = 1 + \frac{C_{14}}{C_{13}}$$
$$\therefore \frac{C_{14}}{C_{13}} = 5$$
$$\therefore C_{14} = 3400 \text{ pF}$$

In practice, it may be preferable to use the round values 700 pF and 3500 pF for C_{13} and C_{14}, and stable capacitors with mica dielectrics should be used.

In the circuit under consideration, the h.t. voltage is 300 V, and the anode load of the second squaring valve is 68 kΩ. From the characteristics of the valve type 12AT7 used, it can be found that the square-wave obtained will have a peak-to-peak voltage of 250 V, approximately. Also, the thyratron 4G280K becomes non-conducting when its anode voltage is less than 8 V.

$$\therefore E = 250 \text{ V}$$
$$v = 8 \text{ V}$$

Height of 6th step $= (E - v)\,\dfrac{(p-1)^{p-1}}{p^p}$

$$= 242 \times \frac{5^5}{6^6} = 16{\cdot}4 \text{ volts}$$

Bias on the gate diode $= v + (E - v)$.

$$\left[1 - \frac{(p-1)^{p-1}(2p-1)}{2p^p}\right]$$
$$= 9 + 242\left[1 - \frac{3150 \times 11}{2 \times 46500}\right] = 160 \text{ volts}$$

This bias is obtained by means of a resistive potentiometer across the h.t. supply. If the resistance R_{14} to h.t. + is 100 kΩ

$$\text{Resistance to earth} = \frac{160}{300 - 160} \times 100\,\text{k}\Omega$$
$$= 114\,\text{k}\Omega$$

This is shown as P_2 in Fig. 6, and can best be made up with a fixed resistance of 90 kΩ, in series with a 50-kΩ potentiometer connected as a variable resistance. All these components should be wire-wound.

The grid bias on the thyratron is − 2·5 V corresponding to a critical anode voltage of 250 V. For a critical anode voltage of 160 V, a grid bias of − 2·1 V is required. Thus, when the anode-cathode voltage reaches 160 V, triggering is caused by a grid pulse of + 0·4 V only. This is a very small fraction of the height of the 6th step, so that the circuit is reliable.

The second frequency divider works under identical conditions, but the input frequency is lower by a factor of six. Thus, the charging and reservoir capacitances C_{19} and C_{20} may be increased by this factor, although the circuit will operate satisfactorily at the lower frequency, with no change.

Monitoring with a C.R. Oscilloscope

As mentioned in Section 4.6, connection to C_{14} or C_{20} should only be made via a cathode follower. The picture obtained on the c.r. oscilloscope screen will include a small spike, as shown in Fig. 7. When the circuit is in correct adjustment, this spike should be half the height of the 6th step. However, the sixth step does not appear in full, so that an estimate must be made from the height of the preceding step.

APERIODIC AERIALS

Use with Vertical-Incidence Ionospheric Recorders

By R. Bailey, B.Sc.

(*Communication from the National Physical Laboratory*)

SUMMARY.—The performance of several types of simple resistance-terminated travelling-wave aerials, of practical height and shape, for transmission and reception in a vertical direction above a perfect flat earth is analysed. The results are applied to finding conditions for the best signal/interference ratio for ionospheric echoes between about 0·5 and 20 Mc/s, using the minimum number of aerials to cover the whole range. The analysis should also have application to sky-wave radio communication over short distances.

1. Introduction

THE heights and critical frequencies of ionospheric regions are measured at frequent intervals as a routine matter throughout the world, the information so obtained being made available[1,2] to engineers and others engaged in planning radio-communications. For this purpose a transmitter radiates radio-frequency pulses upwards and these, after being reflected by the ionosphere, are received and displayed on a time-base so that the apparent height of the reflecting region may be recorded in terms of the time taken by the pulses over their journey. The equipment is usually automatic[3,4,5] and covers completely and continuously a frequency range of the order of 0·5 to 20 Mc/s, the lower limit being set by ionospheric attenuation and the upper by the highest frequency likely to be returned at vertical incidence by the ionosphere. The present paper deals with the design of simple aerial systems which are effective in providing vertical transmission and reception throughout this large frequency range, with particular reference to the low-frequency end.

2. Requirements

(i) To simplify transmitter design it is desirable that the standing-wave ratio produced on the feeder by the transmitting aerial shall not be less than 0·5 at any frequency. This condition is not usually so important for the receiving aerial, however, since it is found that radio noise and interference can be made to override receiver noise even though a large aerial mismatch is present.

(ii) As an arbitrary practical criterion, an aerial should not require more than three 33 m (108 ft) masts, and should not contain an unsupported span longer than 60 m (197 ft).

(iii) Aerials should, of course, be as directional as possible to confine radiation and reception to the vertical. At low frequencies this requirement conflicts with (ii).

3. Choice of Aerials

3.1 *Resonant Aerials*

For use with 600-ohm balanced feeders, the horizontal full-wave cage dipole,[6,7] erected not much below λ/4 high at the mid-band frequency, so that its loop radiation resistance never becomes too low, probably has the flattest impedance-frequency characteristic of any convenient resonant aerial; but, even with multiple stub

MS accepted by the Editor, June 1950.

matching, satisfactory operation (feeder standing-wave ratio not less than 0·5) over 2:1 frequency bands is not readily obtainable. Also, on frequencies below 2-3 Mc/s, the height limitation of Section 2(ii) would exclude this type of aerial.

3.2 *Non-resonant Aerials*

The impedance-frequency characteristic of a non-resonant aerial resembles that of a transmission line of the same length terminated approximately in its characteristic impedance; the rhombus is a well-known example of this kind. Measurements have shown[3] that the input impedance of such an aerial, even when constructed of single wires, usually lies between half and twice the characteristic impedance of the associated feeder over frequency ranges of 10 to 1 and more, so that condition (i) of Section 2 is satisfied. Consequently, attention will be paid only to radiation properties for present purposes.

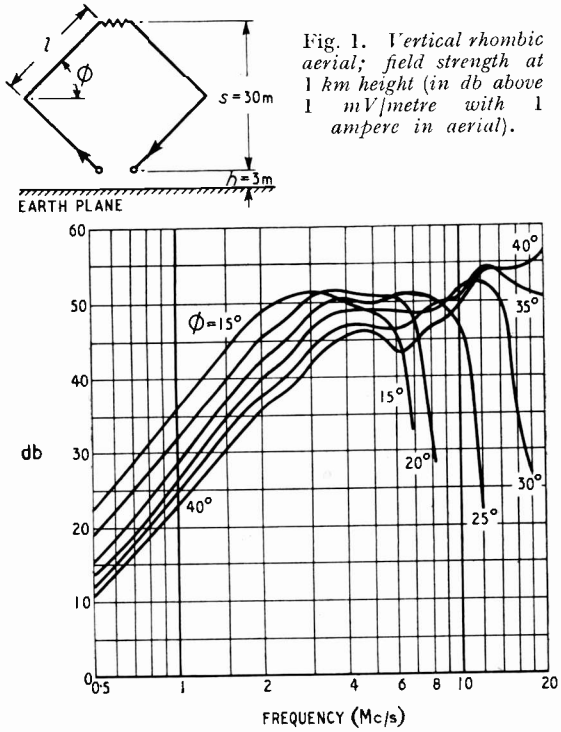

Fig. 1. *Vertical rhombic aerial; field strength at 1 km height (in db above 1 mV/metre with 1 ampere in aerial).*

When estimating the radiation in the main beam from terminated aerials of this type it is both convenient and justifiable[8,9] to assume that damping due to radiation and copper losses is small, and that no standing waves due to mis-termination are present; consequently the magnitude of the current may be regarded as constant along the wire, and the phase velocity uniform and equal to that of light. It is also assumed that the earth is a perfect plane reflector, which assumption is approximately valid[10] for vertical transmission and reception above good ground, since the wave polarization is horizontal.

3.3 *Comparison between Resonant and Non-resonant Aerials*

The cage dipole is a highly efficient radiator as such, but does not match the transmitter over as large a frequency-band as a non-resonant aerial. Now it can be shown that at low frequencies, where aerials are a fraction of a wavelength long, mismatch between transmitter and cage dipole tends to produce a greater loss in radiation than that due to the power absorbed in the terminating resistor of the matched non-resonant aerial; at higher frequencies a terminated aerial can usually be made more effective than a cage dipole and in any case a far more uniform impedance-frequency characteristic is available. Detailed attention has therefore been confined to terminated aerials.

4. Types of Terminated Aerials

4.1 *Vertical Rhombic Aerial*

This aerial[3] has been very widely used for ionospheric work, and is a natural modification of the horizontal rhombus widely used for point-to-point communication. The whole of the aerial is turned into the vertical plane as shown in Fig. 1. It has been shown[11] that the field at a point distance d vertically above the aerial is given in the present notation by the magnitude of:—

$$E = \frac{240 i_0}{d} \cos\phi \left[\frac{\sin^2 \pi l(1 - \sin\phi)/\lambda}{1 - \sin\phi} + \frac{\sin^2 \pi l(1 + \sin\phi)}{1 + \sin\phi} \exp j\,\{2\pi(s + 2h)/\lambda + \pi\} \right]$$

The radiated field has two main components

$$E_f = \frac{240 i_0}{d} \cos\phi \, \frac{\sin^2 \pi l(1 - \sin\phi)/\lambda}{1 - \sin\phi} \quad \text{and}$$

$$E_b = \frac{240 i_0}{d} \cos\phi \, \frac{\sin^2 \pi l(1 + \sin\phi)/\lambda}{1 + \sin\phi}$$

where E_f is the field radiated vertically upwards and E_b that radiated vertically downwards and reflected at the earth's surface. The field E_r at a distant point is the vector sum of these components, which are displaced in phase by $\pi + \frac{2\pi}{\lambda}(s + 2h)$ due to path difference and phase reversal π on reflection at the ground. Although the maximum value of E_f is greater than E_b for any value of ϕ except $\phi = 0$, E_b is usually greater on the lowest frequencies due to the influence of the $\sin^2$ term. For maximum field strength ϕ would be large and $\frac{\pi l}{\lambda}(1 - \sin\phi) \approx \pi/2$, but this is usually incompatible with the limitation of

4.7 *Bent Terminated Folded Dipole*

It is possible to increase the radiation from a terminated folded dipole by increasing its length and bending the extra length down the end masts (see Fig. 5) to avoid increasing the horizontal span. The additional wire does not add directly to the field radiated upwards but increases the phase difference between the currents in the two horizontal parallel arms thereby increasing the effective current, an effect similar to that produced by the addition of a capacitance top to a vertical aerial. The relevant equation is

$$E = \frac{480 i_0}{d} \sin \pi l_4/\lambda \sin \pi(l_4 + 2l_5)/\lambda \sin 2\pi H/\lambda$$

Some curves are shown in Fig. 5.

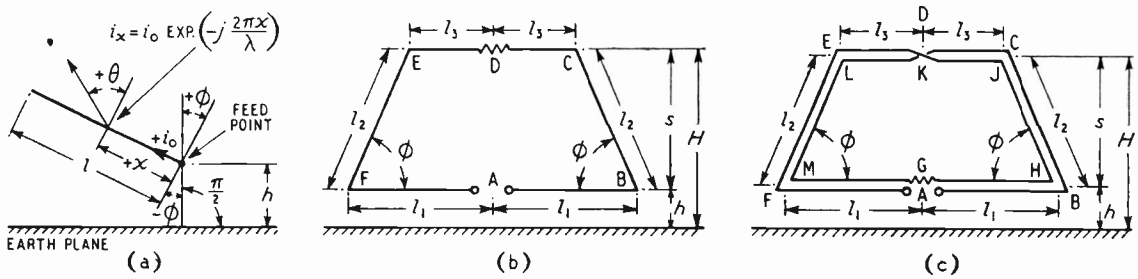

Fig. 6. (*a*) *straight wire aerial;* (*b*) *trapezoidal aerial, and* (*c*) *2-turn trapezoidal aerial.*

5. Comparison of Aerial Types

It is desirable to know the overall directivity diagrams of receiving aerials in order to assess their liability to noise and other interference. Calculating such diagrams is in general laborious, but fortunately a rough idea of the overall directivity of aerials fairly small compared to the wavelength (such as those under discussion at present) can be obtained from the two horizontal and vertical polar diagrams alone. The polar diagram of a particular rhombic aerial in the horizontal perfect earth plane was therefore calculated and the results are shown in Fig. 7. On the lowest frequencies the aerial behaves as a small loop with the usual figure-of-eight polar diagram and a null perpendicular to the line of the aerial. As the frequency increases the main lobe splits, forming subsidiary lobes, but the position of the original null remains unchanged. It is expected that the diagrams for the delta rectangular and trapezoidal aerials will be generally similar.

The terminated folded dipole does not respond at all to vertically-polarized ground radiation and also has a null in the end-on position. On sites near medium-wave transmitters where the received signal is powerful enough to cause cross-modulation in the receiver, the folded dipole erected for minimum pick-up from the transmitter may prove more satisfactory than would be expected from an examination of the field-strength curves. The bent dipole does not have the same advantage since the vertical arms respond to the vertically-polarized radiation.

The calculated curves for the aerials discussed above have one characteristic in common—a very low radiated field at the low frequencies, increasing more or less rapidly with frequency to a definite maximum beyond which the field fluctuates fairly widely. In the case of the terminated folded dipole and rectangular aerials the equations of Section 4 indicate the existence of definite nulls at certain frequencies, but with the other aerials there is a much smaller chance of nulls since the field is the resultant of several unequal vectors varying

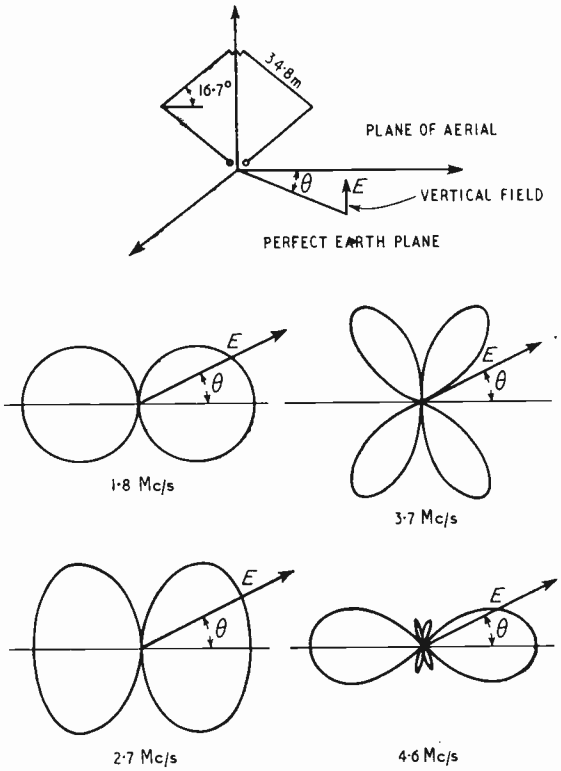

Fig. 7. *Horizontal polar diagrams of vertical rhombic aerial.*

rapidly with frequency both in amplitude and phase. In this region, however, a small change in phase of one of the components, due, for example, to the imperfections of the ground, can cause a large change in the resultant field and, for this reason, most of the curves have been plotted only as far as the first minimum.

Before discussing the merits of the various aerials it is necessary to outline the two main types of equipment with which they are likely to be used. The transmitter of the first type[5] has switched coils in the final stage which may be either a self-oscillator or a power-amplifier. The coils are tuned by a capacitor giving a frequency coverage of two or three to one. This equipment covers the frequency range of 0·55 to 17·6 Mc/s in five ranges and has provision for a separate aerial for each range if available.

On the lowest range (0·55 to 1·1 Mc/s) the two-turn trapezoid (Fig. 4) is about 5 db better than any other aerial at the low end of the band but depreciates seriously at the high end. A slight reduction in length would improve the performance at the high at the expense of the low end. Unless extreme importance is attached to the performance at the lowest frequencies it is doubtful if the use of a two-turn trapezoid is justified. A single-turn trapezoid or a bent folded dipole ($l_5 = 60$ m, Fig. 5) both give a significant gain (10 db) over the largest possible rhombus and either is satisfactory.

On the second range (1·1 to 2·2 Mc/s) the bent terminated folded dipole $l_5 = 30$ m (Fig. 5) is about 6 db better than the largest possible rhombus for most of the range and also has a larger gain than the other aerials considered.

On ranges three and four (2·2 to 4·4 and 4·4 to 8·8 Mc/s) terminated folded dipoles cut to the mid-band frequencies are a little better than the rhombic aerials. On the highest frequency range (8·8 to 17·6 Mc/s) there is little to choose between the dipole and a rhombus with $\phi = 40°$. If higher frequencies were used the rhombic aerials would approach the shapes used for long distance communication and would then show the advantages normally associated with them.

The second type of equipment, described in reference 4, and intended for high-speed frequency sweep in a single, or at most two ranges, has an aperiodic output stage designed to operate with a constant resistive load, via a wideband transformer. With this type of equipment it is as important to obtain a wide frequency coverage with a single aerial as to obtain a high radiated field over a small range of frequency. It is almost impossible to cover the required range effectively with less than two aerials and even then the efficiency is considerably lower than that obtainable with more aerials. If the frequency range (0·55 to 17·6 Mc/s) previously considered is split into two parts, a combination of a terminated folded dipole (possibly bent with $l_5 = 30$ m) and a rhombus with $\phi = 35°$ gives a field-strength that is never more than 10 db lower than that obtained by the use of the five aerials considered above. If only one aerial is possible, the delta with $l_1 = 60$ m (Fig. 2) is worthy of consideration since it is extremely simple to erect and is uniform in output to within 17 db between 1·0 and 15 Mc/s, and is only some 12 db worse than the five best aerials.

6. Conclusions

Equations of radiation in the vertical direction for various kinds of resistance-terminated aerials, which can be erected on three 33 m (108 ft) masts, have been derived and their performance compared. It is shown that at low frequencies in the 0·5 to 20 Mc/s range the vertical rhombic aerial system, which has been commonly used for ionospheric investigations, is some 10 db worse than a trapezoid or bent terminated folded dipole. At the highest frequencies the rhombic aerial appears to be as satisfactory as any. If it is possible to erect only two aerials to cover the whole frequency range, a combination of a terminated folded dipole for low frequencies and a rhombus ($\phi = 35°$) for the high is probably the best compromise. If only one aerial is possible a terminated delta with $\phi = 26°$ is worthy of consideration as it is extremely simple to erect.

Although intended primarily for vertical incidence ionospheric work, the results should have application to short-distance sky-wave communication where the directions of transmission and reception do not differ too greatly from the vertical.

Acknowledgments

The work described above was carried out as part of the programme of the Radio Research Board. This paper is published by permission of the Director of the National Physical Laboratory, and the Director of Radio Research of the Department of Scientific and Industrial Research.

APPENDIX

DERIVATION OF FIELD EQUATIONS

1. *Straight Wire with Uniform Travelling Wave* (Fig. 6)

All the aerials considered in the present paper are combinations of straight wires, so the radiation equation for such wires will be derived.

It is well known that the magnitude of the electric radiation field at a point a large distance d metres from any wire element of length dx carrying a current i_x amperes is given by

$$dE_x = \frac{60\pi \cos\theta}{\lambda d} i_x \, dx \text{ volts/metre}$$

and lies in the plane of dx at right angles to the direction of propagation. θ is the angle between the radius vector to the point and the normal to the current element, and λ is the wavelength in metres. Now if the current element at x forms part of a straight wire of length l carrying a uniform current of magnitude i_0 uniformly retarded in phase,

$$i_x = i_0 \exp(-j2\pi x/\lambda)$$

where x is measured from the current-feed point. The total field from the wire therefore becomes with positive values of θ measured from the normal in the direction of x,

$$E = \frac{60\pi i_0 \cos\theta}{\lambda d} \int_0^l \exp\{-j2\pi x(1-\sin\theta)/\lambda\}\,dx$$

$$= \frac{60 i_0 \cos\theta}{d(1-\sin\theta)} \sin\left\{\pi l(1-\sin\theta)/\lambda\right\} \exp\{-j\pi l(1-\sin\theta)/\lambda\} \quad .. \quad (1)$$

Effect of Ground at Vertical Incidence (Fig. 6)

The radiation in a vertically-downward direction, which is horizontally polarized, due to any positive current element of the wire at height h_x above a perfect earth plane, is reflected upwards with change of sign by this plane and appears to originate from an equal negative current element at h_x below it. Unfortunately the total upward and downward radiations from sloping long-wire aerials are not in general equal, so a simple height-factor of the type associated with dipoles and horizontal rhombic aerials cannot always be obtained: the two fields must be added vectorially.

For a straight wire sloping at an angle ϕ to the ground (Fig. 6), the upward radiation E_u from the whole wire is obtained by putting $\theta = \phi$ in equation (1), and the downward field E_d by putting $\theta = -\phi$. The latter is reversed in sign after reflection and is delayed in phase $2\pi(2h)/\lambda$ by the time it reaches the feed-point again. The total field from the wire therefore becomes:—

$$E = E_u - E_d \exp(-j4\pi h/\lambda) \quad .. \quad .. \quad (2)$$

where

$$E_u = \frac{60 i_0 \cos\phi}{d(1-\sin\phi)} \sin\left\{\pi l(1-\sin\phi)/\lambda\right\} \exp\{-j\pi l(1-\sin\phi)/\lambda\}$$

and

$$E_d = \frac{60 i_0 \cos\phi}{d(1+\sin\phi)} \sin\left\{\pi l(1+\sin\phi)/\lambda\right\} \exp\{-j\pi l(1+\sin\phi)/\lambda\}$$

For $\phi = 0$ (wire horizontal) the symmetry makes a height factor possible, so that equation (2) above becomes

$$E = j\frac{120 i_0}{d} \sin(\pi l/\lambda) \sin(2\pi h/\lambda) \exp\{-j\pi(l+2h)/\lambda\} \quad .. \quad .. \quad .. \quad .. \quad (3)$$

where the phase of the field is in both cases referred to the phase of the current at the feed-point.

2. *Vertical Terminated Trapezoid* (Fig. 6)

Total radiation E_{1T} (vertically upwards)

$$= 2E_{AF} + 2E_{FE} + 2E_{ED} \quad .. \quad .. \quad .. \quad (4)$$

From equation (3)

$$2E_{AF} = j\frac{240 i_0}{d} (\sin\pi l_1/\lambda)(\sin 2\pi h/\lambda) \exp\{-j\pi(l_1+2h)/\lambda\}$$

From equation (2)

$$2E_{FE} = -\frac{120 i_0 \cos\phi}{d}\left[\frac{\sin\pi l_2(1-\sin\phi)/\lambda}{1-\sin\phi} - \frac{\sin\pi l_2(1+\sin\phi)/\lambda}{1+\sin\phi}\exp\{-j2\pi(l_2\sin\phi+2h)/\lambda\}\right] \times \exp\{-j\pi[l_2(1-\sin\phi)+2l_1]/\lambda\}$$

From equation (3)

$$2E_{ED} = -j\frac{240 i_0}{d}(\sin\pi l_3/\lambda)(\sin 2\pi H/\lambda) \times \exp\{-j\pi(l_3+2H)/\lambda\} \times \exp\{-j2\pi(l_1+l_2)/\lambda\} \exp\{+j2\pi l_2\sin\phi/\lambda\}$$

All phases are referred to the phase of the current i_0 at the aerial feed-point.

Removing the constant phase factor

$$\exp\{-j\pi[l_2(1-\sin\phi)+2l_1]/\lambda\}$$

and writing $2\,l_1 \sin\phi = s$ we have:—

$$E_{1T} = \frac{120 i_0}{d}\left[\cos\phi\left\{\frac{\sin\pi l_2(1-\sin\phi)/\lambda}{1-\sin\phi} - \frac{\sin\pi l_2(1+\sin\phi)/\lambda}{1+\sin\phi}\exp - j2\pi(s+2h)/\lambda\right\} + 2j\sin\pi l_3/\lambda \,.\, \sin 2\pi H/\lambda \,.\, \exp - j\pi(2h+s+l_2+l_3)/\lambda - 2j\sin\pi l_1/\lambda \,.\, \sin 2\pi h/\lambda \,.\, \exp - j\pi(2h+s-l_1-l_2)/\lambda\right]$$

REFERENCES

[1] "Monthly Bulletin of Ionospheric Characteristics," issued by the Radio Research Station of the D.S.I.R.

[2] "The Application of Ionospheric Data to Radio Communication," D.S.I.R. Radio Research Special Report No. 18. Published by H.M. Stationery Office, London, Price 1s. Code No. 47-29-18.

[3] H. A. Thomas and R. G. Chalmers, "An Improved Ionospheric Height Recorder," *J. Instn elect. Engrs*, January 1948, Part III, Vol. 95, No. 33, pp. 7-13.

[4] T. L. Wadley, "A Single-Band 0-20 Mc/s Ionospheric Recorder Embodying Some New Techniques," *Proc. Instn elect. Engrs*, November 1949, Part III, Vol. 96, No. 44, pp. 483-486.

[5] R. Naismith and R. Bailey, "An Automatic Ionospheric Recorder for the Frequency Range 0·55 to 17 Mc/s." *Proc. Instn elect. Engrs*, 1951, Vol. 98, Part III, pp. 11-18.

[6] S. A. Schelkunoff, "Electromagnetic Waves," published by D. van Nostrand, pp. 459-469.

[7] "Investigation of the Impedance Characteristics of Horizontal Cage Dipoles for Wavelengths between 15 and 60 metres." Radio Report No. 1011, Post Office Engineering Department.

[8] E. G. Hoffmann, "The Effect of the Exponential Distribution of Current on the Radiation Characteristics of the Rhombic Antenna." *H.F.T.*, July 1943 (in German).

[9] L. Lewin, "Rhombic Transmitting Aerials—Increasing the Power Efficiency," *Wireless Engr*, May 1941, Vol. 18, p. 180.

[10] J. S. McPetrie, "The Reflection Coefficient of the Earth's Surface for Radio Waves," *J. Instn elect. Engrs*, 1938, Vol. 82, p. 214.

[11] C. W. Harrison, Jr., "The Inclined Rhombic Antenna," *Proc. Inst. Radio Engrs*, 1942, Vol. 30, p. 241.

[12] H. N. Cones, "Impedance Characteristics of Some Experimental Broad-band Antennas for Vertical-incidence Ionospheric Sounding." *Bureau of Standards Journal of Research*, 1949, Vol. 43, pp. 71-78.

AN ELECTRONIC RAM

By W. Raudorf, Dr.Phil.

SUMMARY.—A simple method for accelerating electrically-charged particles is suggested, based on the transfer of the energy of a moving electric charge to a small fraction of that charge. A tubular arrangement is described in which the axial velocity of an electron beam is controlled by a longitudinal magnetic field. The beam is suddenly decelerated on entering a zone of rapidly increasing magnetic-field intensity, as a consequence of which a potential barrier arises at the front of the beam. Electrons beyond this barrier become accelerated in the induced electric field. An extremely short and powerful e.m. pulse is generated.

Introduction

At the present time no less than eight different methods, actual or projected are available for the acceleration of electrons or ions.[1] All these methods, however, are uneconomical and necessitate ponderous, complicated equipment which can only be handled by experts. This fact may justify the proposal of another method, which appears to be comparatively simple and highly efficient. This method is based on the transfer of the total magnetic energy of a moving electric charge to a small fraction of that charge. The device suggested represents the electrical analogue of the hydraulic ram.

Basic Arrangement

An evacuated earthed tube T (Fig. 1) of axial symmetry contains a highly emissive cathode K, which is magnetically screened, and a metal grid G. Outside T there is a pulsing system connected to K which enables large current pulses to be produced. During pulses the grid G attains a potential V_0 with respect to K. The duration of a pulse is long in comparison to the transit time t_0 of the electrons in the tube. If necessary, electrostatic focusing may be applied in section 1 (i.e., between K and G) to achieve the desired intensity of electron current.[2] The length of section 1 as well as that of section 3 (i.e., between z_1 and z_3) is very small compared with that of section 2 which is greater by orders of magnitude than the radius R of the tube. For reasons given later it seems to be advantageous to increase the radius R' of the tube in section 3. The length of section 3 is supposed to be several times larger than R'.

The dominant feature of the design is the employment of a static, axially symmetric magnetic field B_z. This focusing magnetic field, produced by suitable coils in the usual way is supposed to vanish in the region of the cathode, to be uniform in section 2 (i.e., between z_0 and z_1) and to increase rapidly within $\Delta z = z_2 - z_1 \ll z_1$ to a value $> B_l$. To achieve this increase of the field intensity, it might prove helpful to make the first two sections of the tube of magnetic, but the last section of non-magnetic, material. The application of such a magnetic field solves the problem of projecting a tubular high-current beam for an infinite distance without significant changes occurring in the cross-sectional area of the beam, or in the cross-sectional distribution of current and potential. Moreover, it permits the entire control of the axial velocity of the beam.

MS accepted by the Editor, June 1950

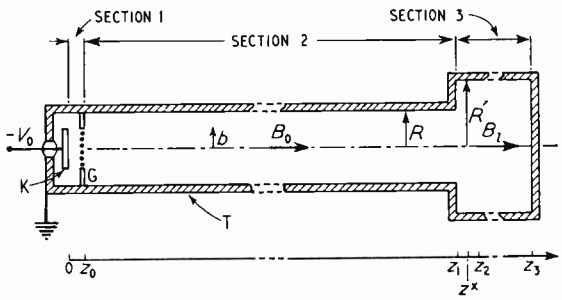

Fig. 1. *Diagrammatical representation of the basic arrangement of an electronic ram.*

Operation

A strong electron current is drawn from the cathode, and forms a steady tubular beam in section 2 under the influence of the constant focusing magnetic field B_0. All the electrons in the beam rotate round the axis with uniform angular velocity $d\phi/dt$ and approach section 3 with the same axial velocity dz/dt. During the transit time t_0 a constant current i_0 passes through the system, apart from a small fraction of the total current which is intercepted by G. Advancing into the zone of increasing magnetic field intensity, the beam experiences a radial compression at the front, due to the stronger Lorentz forces, until these forces are again balanced by the space-charge repulsive forces, and centrifugal forces. At the same time the axial velocity of the electrons decreases and becomes zero in the region, where $B(r, z) = B_l$. The increasing density of the space charge there causes the potential to drop, and a potential barrier arises which the succeeding electrons cannot pass. A space-charge limited virtual cathode is formed, as would be the case in a beam-power tetrode between screen grid and

anode, when due to excessive space current the space-charge density exceeds a certain limit. The axial potential gradient becomes negative in section 2, zero at $z = z^x$, and positive in section 3. As the virtual cathode develops the beam current falls off, accompanied by a collapse of the magnetic field, which induces an axial electric field. Thus exchange of magnetic and electric energy takes place. The induced electric field appears in section 3 only. In section 2 it is compensated by the electric field due to the non-uniform space-charge distribution along the beam during the bunching period. Exactly the same happens for instance in a series-resonant circuit, consisting of an inductor and capacitor, providing the components are made of an ideal conductor.

During the conversion of magnetic into electric energy the electric field along the wire which forms the inductor remains zero because of the superposition of the induced electric field, and the electric field caused by the change of concentration of the conduction electrons. The line integral $\int oEdl$, taken along the circuit vanishes except between the plates of the capacitor, and, therefore, becomes equal to the p.d. across the capacitor. Hence the induced electric field is confined to the space between the plates.

The induction lines emerging from the inner wall of tube T in section 3 end at the front of the beam, and do not penetrate because of the high space-charge density. This screening effect of the surface electrons is, in fact, the cause of the development of the potential barrier. The front electrons, on which the induction lines end, constitute the charge beyond the potential barrier in the region of the positive potential gradient. The focusing magnetic field there, although greater than B_l, which decelerated the axial speed of the arriving electrons in the originally field-free space, is no longer the limit field for the electrons in the induced electric field beyond the virtual cathode. These electrons become accelerated, therefore, at the expense of the electric-field energy, which becomes converted into magnetic energy as the electrons gain speed while traversing section 3.

Thus an electromagnetic field is suddenly produced in the originally field-free section 3, and fades when the electrons hit the tube. The discharge process into section 3 can be regarded, therefore, as a very short electromagnetic pulse which the tube would radiate, if it were shaped as a reflector and if its end plate were made of a dielectric; e.g., glass.

During the discharge, the space-charge density within Δz decreases, and the virtual cathode moves in the direction of the negative z-axis, gradually disintegrating. Simultaneously with this, the axial electric field in section 2 fades.

The fact that the magnetic energy of an electronic charge is proportional to its electromagnetic momentum implies that the beam in section 2 loses its total electromagnetic momentum when the magnetic field breaks down; i.e., when the current through the tube ceases. This can also be inferred from the nature of the inter-electronic forces, arising during the bunching, which have components antiparallel to the velocity of the electrons (Coulomb field). As the Larmor force vanishes when the momentum of the electrons becomes zero, the radial space-charge field scatters the electrons towards the tube, where they finally land.

The whole process in the tube may be illustrated by its hydraulic counterpart. Imagine a horizontal supply pipe, several feet long, to the tapered end of which a discharge pipe of very much smaller cross-section is joined. A strong current of water is directed into the empty supply pipe, filling up its entire cross-section. Arriving at the tapered end it is rapidly stopped, and hammers water into the discharge pipe. The kinetic energy of the total water current in the supply pipe is thus transferred to a small fraction of the whole mass of water.

Theory

The following analytical treatment is based on the physical picture presented in the previous section, and can by no means be regarded as complete. It is hoped, however, that it will serve to show that the conclusions drawn are compatible with established facts and principles. For the sake of lucidity an attempt is made to describe the operation of the ram with a minimum of mathematics. A macroscopic analytical approach is, therefore, chosen. In any case only an experiment could be decisive.

Section 2 appears to take on the role of an inductance, section 3 that of a capacitance. The equivalent circuit is consequently very simple, consisting of an inductor in series with a capacitor, across which an ideal switch permits the circuit to open instantaneously when the current through the circuit attains a constant value. When applying the usual laws to this circuit, it is fundamental to realize that Faraday's laws on electromagnetic induction hold whether electric current is guided by wire or a static magnetic field.

Giorgi's rationalized unit system (m.k.s.) is employed.

Cylindrical Electron Beam

The properties of electron beams in axial magnetic fields have been investigated by several workers. As far as necessary the results of the

theory will be summed up. More details may be obtained from literature.[3,4,5]

It is known that the motion of electrons in a combined electric and magnetic field can be determined by means of the standard Lagrange scheme, if $L(q_i, dq_i/dt, t) = \frac{1}{2}mv^2 - eV + e(\boldsymbol{vA})$ is used as Lagrangian function. The velocity $\boldsymbol{v}$ of the electrons, which is supposed to be small compared with the velocity of light, the scalar potential V referred to ground, and the vector potential $\boldsymbol{A}$, become in this way functions of the general co-ordinates q_i, their time derivatives dq_i/dt and t. As the system considered shows axial symmetry, it is natural to choose cylindrical co-ordinates r, z, ϕ. In the static case, where the potentials are independent of time, the Lagrangian equations may be written

$$\frac{d}{dt}\left(\frac{\delta L}{\delta(dq_i/dt)}\right) = \frac{\delta L}{\delta q_i} \text{ or } \frac{dp_i}{dt} = \frac{\delta L}{\delta q_i} \quad .. \quad (1)$$

where p_i designates the generalized momentum component, and

$$L(q_i, dq_i/dt) = L(r,z,\phi,dr/dt,dz/dt,d\phi/dt)$$
$$= \tfrac{1}{2}m\{(dr/dt)^2 + (dz/dt)^2 + r^2(d\phi/dt)^2\}$$
$$- eV(r,z) + er(d\phi/dt)A(r,z) \quad .. \quad .. \quad (2)$$

Hence the equations of motion

$$d^2r/dt^2 = r(d\phi/dt)^2 + kE_r + kAd\phi/dt$$
$$+ kr(d\phi/dt)\delta A/\delta r \quad .. \quad .. \quad .. \quad (3)$$
$$d^2z/dt^2 = kE_z + kr(d\phi/dt)\delta A/\delta z \quad .. \quad (4)$$
$$p_\phi = mr^2d\phi/dt + erA = \text{const.} \quad .. \quad (5)$$

E_r and E_z are components of the field intensity $\boldsymbol{E}$, $k=e/m$.

These equations, together with the energy equation,

$$\tfrac{1}{2}m\{(dr/dt)^2 + (dz/dt)^2 + r^2(d\phi/dt)^2\}$$
$$+ eV = \tfrac{1}{2}mv_0^2 \quad .. \quad .. \quad .. \quad (6)$$

where $v_0^2 = 2kV_0$, V_0 being the p.d. between tube and cathode, and the relation

$$\boldsymbol{B} = \text{curl } \boldsymbol{A} \quad .. \quad .. \quad .. \quad .. \quad (7)$$

completely determine the properties of a tubular beam in an axial magnetic field.

Steady Beam

Now it is not difficult to find the conditions under which a steady, cylindrical beam of radius b can be produced and maintained in section 2, if V_0, B_0 and the geometry of the system are given.

From equation (7) it follows that $A_r = A_z = 0$

$$\text{and} \quad A_\phi = \tfrac{1}{2}rB_0 \quad .. \quad .. \quad .. \quad (8)$$

As the length of the tube is very great in comparison to its radius R the field intensity $\boldsymbol{E}$ due to the space charge can be considered as a function of r only. Equations (4) and (8) therefore, give $d^2z/dt^2 = 0$ and $dz/dt = \text{constant}$. Provided that the cathode is screened from the magnetic field, and that the initial velocities of the electrons can be ignored, the momentum p_ϕ at $z=0$ is zero. As the momentum must be preserved, p_ϕ must be zero for $z>0$ as well. The constant on the right-hand side of (5) is, therefore, zero. Consequently

$$d\phi/dt = -kA_\phi/r = -\tfrac{1}{2}kB_0 \quad .. \quad (9)$$

which shows that all the electrons in section 2 turn round the z-axis with the same angular velocity $(d\phi/dt)_0$ (Larmor precession). From (8) and (3) it follows that $d^2r/dt^2 = r(d\phi/dt)^2 + kE_r + krB_0d\phi/dt$.

The maintenance of a steady beam with no radial motion requires that both d^2r/dt^2 and dr/dt are zero.

$$\text{Hence} \quad mr(d\phi/dt)^2 + eE_r + erB_0d\phi/dt = 0 \quad (10)$$

That means that the radial electric force eE_r, the Lorentz force $erB_0d\phi/dt$ and the centrifugal force $mr(d\phi/dt)^2$ must compensate each other in order to give no radial acceleration and to maintain $d^2r/dt^2 = 0$. By inserting (9) in (10) one obtains

$$E_r = \tfrac{1}{4}krB_0^2 \quad .. \quad .. \quad .. \quad .. \quad (11)$$

E_r on the other hand is related to the space-charge density ρ by Poisson's equation $(1/r)(\delta/\delta r)(rE_r) = \rho/\epsilon_0$ which integrated gives within the beam $\quad E_r = r\rho/2\epsilon_0 \quad .. \quad (12)$

and with (11)

$$\rho = \rho_0 = \tfrac{1}{2}\epsilon_0 kB_0^2 \quad .. \quad .. \quad .. \quad (13)$$

To determine the axial velocity dz/dt equations (6) and (9) are used. Thus

$$(dz/dt)^2 = 2kV_0 - (\tfrac{1}{2}rkB_0)^2 - 2kV \quad .. \quad (14)$$

The second integration of Poisson's relation provides the potential equations

$$V = \rho/2\epsilon_0 b^2 \log R/b + \rho/4\epsilon_0(b^2 - r^2) \quad (15)$$

within the beam, and

$$V = \rho/2\epsilon_0 b^2 \log R/r \quad .. \quad .. \quad .. \quad (16)$$

between beam and tube. Substituting (15) in (14) and replacing ρ by (13) one gets

$$(dz/dt)^2 = (dz/dt)_0^2 = 2kV_0 - (\tfrac{1}{2}kbB_0)^2(1 + 2\log R/b)$$
$$.. \quad .. \quad (17)$$

The total beam current is given by $i_0 = \pi b^2\rho_0 (dz/dt)_0$ or with (13) and (17)

$$i_0 = \tfrac{1}{2}\pi b^2\epsilon_0 k\{B_0^2[2kV_0 - (\tfrac{1}{2}kbB_0)^2(1 + 2\log R/b)]^{\frac{1}{2}}\}$$
$$.. \quad .. \quad .. \quad (18)$$

The equations derived (11), (13), (17) and (18) govern the existence of a steady, cylindrical beam of uniform space-charge density ρ_0, in which the axial velocity of all the electrons has the same value $(dz/dt)_0$, and in which the space-charge repulsive forces are just balanced by magnetic-focusing forces, so that the beam may be made as long as desirable without any change in its cross-section.

Equation (17), together with (9), indicates that the energy of the beam is partially transformed into rotational energy. The axial velocity diminishes with increasing B_0 and vanishes for $B_0 = B_l$, where B_l designates the limit field which is defined by

$$B_l = \left(\frac{8V_0}{kb^2(1 + 2\log R/b)}\right)^{\frac{1}{2}} \quad \ldots \quad \ldots \quad (19)$$

or $$B_l = \frac{6{\cdot}65\sqrt{V_0}}{b(1 + 2\log R/b)^{\frac{1}{2}}} \text{ gauss}$$

with b in cm and V in volts. No current can pass the tube, if $B_o \geqslant B_l$.

Introducing the ratio $\alpha = B_0/B_l < 1$ and writing αB_l for B_o in (17) and (18), one finds, together with (19) $(dz/dt)_0 = [2kV_0(1 - \alpha^2)]^{1/2}$ or

$$(dz/dt)_0 = 5{\cdot}93 \times 10^7 V_0^{\frac{1}{2}}(1 - \alpha^2)^{\frac{1}{2}} \text{cm/sec} \quad (20)$$

and $$i_0 = \frac{4\pi\epsilon_0(2k)^{\frac{1}{2}}\alpha^2(1-\alpha^2)^{\frac{1}{2}}}{1 + 2\log R/b} V_0^{3/2}$$

or $$i_0 = \frac{6{\cdot}58 \times 10^{-5}\alpha^2(1 - \alpha^2)^{1/2}}{1+2\log R/b} V_0^{3/2} \text{ A.} \quad (21)$$

Principle of Continuity

Two fundamental laws govern the operation of the electronic ram, namely the principle of continuity and the principle of conservation of energy.

The first law is usually expressed in the form of the continuity equation $\operatorname{div}(\rho \boldsymbol{v} + d\boldsymbol{D}/dt) = 0$, where $\boldsymbol{D}$ is the vector of electric induction. Applying this equation to the discharge process in the tube, one finds after some rearrangement[6] $\pi b^2 \rho dz/dt + \int_s (d\boldsymbol{D}_n/dt)ds = 0$. This means that the electronic current entering the tube during $t = 0$ and $t = t_0$ is continued in the form of displacement current, which passes through the inner surface S of the tube, ds being a surface element of S with the normal n directed to the inside. The current intercepted by grid G is neglected.

For the period after t_0 the relation results $\int_{t_0}^{t_0+\Delta t} i dt = \int_v d\rho/dt d\tau$, indicating that the space-charge distribution in section 2 becomes non-uniform during the time interval Δt. $d\tau$ denotes a volume element of the volume V within the tube.

Conservation of Energy

The principle of the conservation of energy is employed in the form of Poynting's theorem,

$$\operatorname{div} \boldsymbol{S} = -\rho \boldsymbol{v}\boldsymbol{E} - dw/dt \quad \ldots \quad \ldots \quad (22)$$

$\boldsymbol{S}$ = Poynting's vector, w = density of electromagnetic energy.

This means that the energy streaming into unit volume per unit time is partially used to accelerate the electrons, and partially to increase the electromagnetic energy. Heat dissipation can only arise at G and will be taken into account by introducing the spacing factor η of G; i.e., the ratio of open and total area of G. The directions of $\boldsymbol{v}$ and $\boldsymbol{E}$ are chosen such as to make $\rho \boldsymbol{v}\boldsymbol{E} > 0$ in case the electrons become decelerated; i.e., when they deliver energy to the system.

Equation (22) must be integrated over the space inside T and over the period of operation t. Thus

$$\int_v \int_0^t \operatorname{div} \boldsymbol{S} d\tau dt = \int_v \int_0^t (\rho v + \boldsymbol{E} dw/dt) d\tau dt$$

or, converting the left-hand side into a surface integral

$$\int_s \int_0^t \boldsymbol{S}_n ds dt = -\int_v \int_0^t (\rho v \boldsymbol{E} + dw/dt) d\tau dt$$

ds being a surface element of $\boldsymbol{S}$.

As there is no field on $\boldsymbol{S}$ at any time, the surface integral may be put zero without appreciable error, and

$$\int_v \int_0^t \rho \boldsymbol{v}\boldsymbol{E} d\tau dt = -\int_v \int_0^t (dw/dt) d\tau dt$$

or $$\int_v \int_0^t \rho \boldsymbol{v}\boldsymbol{E} d\tau dt = -\int_v \int_0^t \left(\frac{dw_e}{dt} + \frac{dw_m}{dt}\right) d\tau dt \quad (23)$$

where w_e = density of electric and w_m density of magnetic energy.

The integration of (23) over the period of operation is carried out in two steps. First from $t = 0$ to $t = t_0$, when the front of the beam just reaches the plane at $z = z_1$, and then from t_0 to $t_0 + \Delta t$, when the current ceases. Thus

$$\pi b^2 \int_0^{z_1} \int_0^{t_0} \rho \boldsymbol{v}\boldsymbol{E} dz dt = -\int_v [w_e(t_0) + w_m(t_0)] d\tau$$

and integrated $\eta i V_0 t_0 = W_e(t_0) + W_m(t_0)$

η = spacing factor of G, i = current drawn from K during time t_0 by grid G on potential V_0 with respect to cathode; $W_e(t_0)$ and $W_m(t_0)$ represent, respectively, the electric and magnetic energies in the system at $t = t_0$. Hence the total magnetic energy

$$W_m(t_0) = i_0 V_0 t_0 - W_e(t_0) \quad \ldots \quad \ldots \quad (24)$$

where i_0 stands for ηi.

The integration from t_0 to $t_0 + \Delta t$ is based on the assumption that a space-charge limited virtual cathode develops in the plane through z^x, accompanied by a rapid drop of the beam current. This assumption appears to be justified by the results of the theory of space charge. Potential distribution in a region traversed by electrons with relatively small velocities, particularly the formation of virtual cathodes, has been studied extensively by a great many workers. The results, however, cannot be expressed in terms of

elementary functions, and are presented in the form of curves. Further information, therefore, may be obtained from literature.[8,9,10]

According to the theory of space-charge, the potential $V(r,z^x,t)$ becomes a minimum, when the current through the plane $z=z^x$ ceases (i.e., at the time $t_0+\Delta t$) which means $E_z(r,z^x,t_0+\Delta t)=0$. Its development is due to the fact that the bunched front electrons screen off the interior electrons from the induction lines which orignate on the inner wall of the tube T. The electrons are not drawn out as rapidly as they arrive at z^x. A point is reached at which this process becomes accumulative. A virtual cathode is formed as both velocity and field intensity vanish.

As already explained, the focusing magnetic field is not the critical field for the front electrons on which the induction flux ends, as formula (19) holds only in the field-free case. These electrons, however, are actually in an electric field as soon as the potential drops within Δz. They will gain axial speed during the bunching period which, of course, is controlled by the focusing magnetic field, and reach, say z_2 at $t_0+\Delta t$.

To carry on with the integration, equation (23) is modified by substituting $\boldsymbol{E}d\boldsymbol{D}/dt+\boldsymbol{H}d\boldsymbol{B}/dt$ for dw/dt and using the relation $\boldsymbol{I}=\rho\boldsymbol{v}+d\boldsymbol{D}/dt$, where $\boldsymbol{I}$ denotes the vector of the total current density and $\boldsymbol{D}$ the vector of the electric induction.

Thus $$\int_v\int_t^{t_0+\Delta t}\boldsymbol{I}\boldsymbol{E}d\tau dt=-\int_v\int_{t_0}^{t_0+\Delta t}(dw_m/dt)d\tau dt.$$

Since $\boldsymbol{I}$ in section 1 and 2 is essentially electronic, and in section 3 displacement current during Δt, the last equation may be written

$$\pi b^2\int_0^{z_0}\int_{t_0}^{t_0+\Delta t}\rho\boldsymbol{v}\boldsymbol{E}dzdt+\pi b^2\int_{Z_0}^{Z^x}\int_{t_0}^{t_0+\Delta t}\rho\boldsymbol{v}\boldsymbol{E}dzdt$$
$$+\int_{v_3}\int_{t_0}^{t_0+\Delta t}(\boldsymbol{E}d\boldsymbol{D}/dt)d\tau dt=-\int_{t_0}^{t_0+\Delta t}(d\boldsymbol{W}_m/dt)dt \quad (25)$$

The first integral on the left-hand side is readily found to be

$$-\eta V_0\int_{t_0}^{t_0+\Delta t}idt \quad \ldots \quad \ldots \quad \ldots \quad (26)$$

Its value represents the energy invested during Δt.

The second integral on the left-hand side vanishes for the following reasons. Provided that the beam does not scatter during Δt, the distribution of the space charge along the beam becomes non-uniform because of the electromagnetic inertia of the electrons. The space-charge density ρ will increase with z and t, finally attaining a maximum at z^x and $t_0+\Delta t$. Consequently a reacting electric field develops simultaneously with the change of the electromagnetic momentum, which is proportional to the change of the magnetic field. In other words, the induced electric field and the reacting field, due to the non-uniform space-charge distribution, are superimposed. The superposition of both fields constitutes the resulting field within the beam. The principal of action and reaction demands that

$$E_z=(-\text{grad}\ V-dA/dt)_z=0.$$

Consequently there is no work done in section 2 during Δt. Electrokinetic energy is merely turned into potential energy.

In contrast to section 2 there is no reacting field in section 3. Ignoring the electric field energy at $t=t_0$, the third integral, after some rearrangement, becomes

$$\int_{v_3}\int_{t_0}^{t_0+\Delta t}(\boldsymbol{E}d\boldsymbol{D}/dt)d\tau dt=\frac{\epsilon_0}{2}\int_{v_3}E^2(t_0+\Delta t)d\tau$$

and $$\frac{\epsilon_0}{2}\int_{v_3}\boldsymbol{E}^2(t_0+\Delta t)d\tau$$
$$=\frac{1}{2}\int_0^b\int_{z^x}^{z_2}\int_0^{2\pi}V(r,z,t_0+\Delta t)\rho(r,z,t_0+\Delta t)rdrdzd\phi$$

The left-hand side of the last equation represents the total energy transferred to section 3 during Δt; the right-hand side, as it stands, the potential energy only of the charge between z^x and z_2. To account for the electrokinetic energy of the charge as well, the potential V has to be replaced by the energy level to which the electrons within z_2-z^x are lifted. Taking into account both electric (= potential) and magnetic (= electrokinetic) energies, the energy level of all the electrons in the section of the beam between z^x and z_2, at the time $t_0+\Delta t$, is the same, namely $V^x=V(0,z^x,t_0+\Delta t)$. Hence

$$\int_{v_3}\int_{t_0}^{t_0+\Delta t}\boldsymbol{E}(d\boldsymbol{D}/dt)d\tau dt=\frac{1}{2}V^x\int_0^b\int_{z^x}^{z_2}\int_0^{2\pi}\rho rdrdzd\phi\ ,$$

or, applying Gauss' theorem to the section of the beam within z_2-z^x

$$\int_{v_3}\int_{t_0}^{t_0+\Delta t}\boldsymbol{E}(d\boldsymbol{D}/dt)d\tau dt$$
$$=\frac{\epsilon_0}{2}V^x\int_0^b\int_0^{2\pi}E_{+z}(r,z_2,t_0+\Delta t)rdrd\phi \quad (27)$$

The integral on the right-hand side of (27) appears to be a surface charge, although the charge between z^x and z_2 is a space charge. The explanation is as follows. The potential distribution on both sides of a virtual cathode is proportional to the four-thirds power of distance. This is just the way[11] in which the potential must vary in order that $E_r=0$. If, therefore, Gauss' theorem is

applied in order to find the charge between z^x and z_2, the flux only through the front of the beam appears in the formula, since $E_{-z}(r,z^x,t_0 + \Delta t)$ vanishes as well.

The integral on the right-hand side of (27) is evaluated in the following way. The potential distribution in a semi-infinite cylindrical tube of radius R and axis ζ, terminated at the origin $\zeta = 0$ by a disc over which the potential distribution is given by the function $V(r)$, can be described[7] by:

$$V(r,\zeta) = \sum_{n=1}^{\infty} A_n \exp\left(\frac{-x_n\xi}{R}\right) J_0\left(\frac{x_n r}{R}\right) \qquad (28)$$

with $A_n = \dfrac{2}{J_1^2(x_n)} \dfrac{1}{R^2} \displaystyle\int_0^R V(r) J_0 \frac{x_n r}{R} r dr$

J_0 and J_1 are Bessel functions, x_n=nth root of $J_0(x)$. In the case under consideration $V(r)$ may be chosen without fundamental error:

$$V(r) = V^x \cos(\pi r/2R) \qquad \ldots \quad \ldots \qquad (29)$$

where V^x stands for the potential at $r = \xi = 0$, ξ being $z - z_2$.

Using $E_{+z} = -\delta V/\delta z$, and substituting (28) in (27) one finds

$$\int_{v_s} \int_{t_0}^{t_0+\Delta t} \mathbf{E}(d\mathbf{D}/dt) d\tau dt = \frac{1}{2} V^{x2} C(b,R) \qquad (30)$$

C being a function of b and R, which can be determined by numerical integration.

It is known from electron optics that a decelerating electric field has a focusing effect. If the beam does not diverge while traversing section 2, it cannot be expected to scatter during the bunching period Δt, because of the decelerating reacting electric field.

The result of the integration of equation (25) is, with regard to (26) and (30), as follows:

$$\frac{1}{2} V^{x2} C = W_m(t_0) + \eta V_0 \int_{t_0}^{t_0+\Delta t} i dt$$

Because $\Delta t \ll t_0$, the last term on the right-hand side is small relative to $W_m(t_0)$, and can thus be neglected. Therefore,

$$\frac{1}{2} V^{x2} C = W_m(t_0)$$

or with (24)

$$\frac{1}{2} V^{x2} C = i_0 V_0 t_0 - W_e(t_0) \quad \ldots \quad \ldots \qquad (31)$$

The work of acceleration $i_0 V_0 t_0$ is given to a close approximation by $\pi b^2 \rho_0 z_1 V_0$ and the electric-field energy by

$$W_e(t_0) = \frac{1}{2} \pi b^2 \int_0^{z^1} \rho V dz$$

or integrated, using (15)

$$W_e(t_0) = \frac{b^4 \pi \rho_0^2 z_1}{16 \epsilon_0} (1 + 4 \log R/b)$$

Hence

$$W_m(t_0) = \pi b^2 z_1 \left[\rho_0 V_0 - \frac{b^2 \rho_0^2}{16 \epsilon_0} (1 + 4 \log R/b) \right]$$

Substituting (13) for ρ_0, putting $B_0 = \alpha B_1$ and replacing B_1 by (19) one finally finds

$$W_m(t_0) = \frac{4\pi \epsilon_0 \alpha^2 V_0^2 z_1}{1 + 2 \log R/b} \left(1 - \frac{\alpha^2}{4} \frac{1 + 4 \log R/b}{1 + 2 \log R/b} \right)$$

or

$$W_m(t_0) = V_0^2 \frac{1 \cdot 11 \times 10^{-10} \alpha^2 z_1}{(1 + 2 \log R/b)} \left(1 - \frac{\alpha^2}{4} \frac{1 + 4 \log R/b}{1 + 2 \log R/b} \right) \text{watt-sec} \qquad (32)$$

with z_1 in metres, and V_0 in volts, and

$$V^x = V_0 \left[\frac{8\pi \epsilon_0 \alpha^2 z_1}{C(1 + 2 \log R/b)} \left(1 - \frac{\alpha^2}{4} \frac{1 + 4 \log R/b}{1 + 2 \log R/b} \right) \right]^{1/2}$$

or

$$V^x = V_0 \left[\frac{2 \cdot 22 \times 10^{-10} \alpha^2 z_1}{C(1 + 2 \log R/b)} \left(1 - \frac{\alpha^2}{4} \frac{1 + 4 \log R/b}{1 + 2 \log R/b} \right) \right]^{1/2} \qquad (33)$$

The relation $W_m(t_0) = \frac{1}{2} i_0^2 L$, together with (32) and (21), permits the calculation of the inductance L of the system. It is found to be

$$L = \frac{5 \cdot 15 \times 10^{-2} (1 + 2 \log R/b) z_1}{\alpha^2 (1 - \alpha^2) V_0} \left(1 - \frac{\alpha^2}{4} \frac{1 + 4 \log R/b}{1 + 2 \log R/b} \right) \text{H.} \qquad (34)$$

The integration of the differential equation

$$d\left(\frac{1}{2} i^2 L\right) + d\left(\frac{1}{2} V^2 C\right) = 0$$

in the usual way yields

$$V^x = i_0 \sqrt{L/C}$$

$$V^x C = i_0 \sqrt{LC} \qquad \ldots \quad \ldots \quad \ldots \qquad (35)$$

$$\Delta t = \frac{1}{2} \pi \sqrt{LC} \qquad \ldots \quad \ldots \quad \ldots \qquad (36)$$

After the bunching period, the small charge CV^x becomes the object upon which the field generated by the total charge of the beam acts. As this charge gains electromagnetic momentum

traversing section 3, the electric field breaks down.

During the discharge into section 3 the space-charge density within Δz deceases, in consequence of which the potential barrier recedes along the beam into section 2, becoming smaller and smaller until it vanishes. This 'recoiling' of the potential barrier may be regarded as the reaction to the propulsion of the charge CV^x.

The velocity of the fastest electrons is V^x eV, and that of the slowest is zero, provided that the metal tube is completely closed. The electrons, however, will lose energy by radiation if, for instance, the end of the tube is closed by a glass disc.

When the axial field is breaking down the beam in section 2 disperses radially for reasons already given.

Discussion

The results of the calculations may be summarized as follows. The electrons emitted by the cathode K during operation become accelerated traversing section 1. The work of acceleration $i_0V_0t_0$ is supplied by the pulse system outside T. Entering the field-free section 2 the electrons form a steady cylindrical beam which represents electric and magnetic energy. The sum of both, after the transit time t_0, is equal to the invested acceleration energy $i_0V_0t_0$. The electric field in section 2 shows only a radial component proportional to r inside the beam, and to $1/r$ between beam and tube. The energy which this electric field represents is wasted energy. To reduce this to a minimum R/b should become 1. As to the magnetic energy, $a = B_0/B_1$ should be chosen little less than unity. To achieve a maximum value of V^x for a given V_0 and z_1, the ratios z/z_1 and C/z_1 must be kept as small as possible. It is, therefore, advisable to make the radius R' of the tube in section 3 larger than R, and the magnetic field considerably greater than B_l.

It is understood that the front of the beam will not be as sharp as assumed in the calculation. This has the effect that the actual value of Δt is greater than the theoretical value. As the rate of change of W_m (i.e., $d/dt(\frac{1}{2}i^2L)$ depends on $\Delta t/t_0$, the length of section 2 has also to exceed the theoretical value to account for the difference between the practical and the theoretical value of Δt.

Assuming that the collapse of the electromagnetic field in section 3 takes the same time as the building up process, the power of the electromagnetic pulse generated in section 3 would be given by $W_m/2\Delta t$. Under conditions as given in the following example No. 3, its value would be of the order 10^7 W.

The author realizes that important questions remain open. Energy considerations alone cannot be expected to furnish a complete description of the whole mechanism, and equations (9)-(13) do not hold during Δt, as the scalar potential V is not independent of time during this period.

A rigorous analytical treatment, however, is beyond the scope of this paper, which rather serves to put the problem than to solve it.

Examples

(1) $V_0 = 3 \times 10^4$ V, $z_1 = 100$ cm, $R = R' = 2{\cdot}5$ cm, $b = 0{\cdot}34$ cm, $a = 0{\cdot}9$, $R/b = e^2$

From equation (19), $B_l = 1510$ gauss, hence $B_0 = 1360$ gauss

From equation (20), $(dz/dt)_0 = 4{\cdot}5 \times 10^9$ cm/sec, hence $t_0 = 2{\cdot}22 \times 10^{-8}$ sec

From equation (21), $i_0 = 24$ A

From equation (32), $W_m(t_0) = 1{\cdot}03 \times 10^{-2}$ W-sec

From equation (30), $C = 1{\cdot}1 \times 10^{-14}$ F

From equation (34), $L = 3{\cdot}55 \times 10^{-5}$ H

From equation (35), $V^xC = 1{\cdot}51 \times 10^{-8}$ A-sec

From equation (36), $\Delta t = 9{\cdot}8 \times 10^{-10}$ sec

From equation (33), $V^x = 1{\cdot}37 \times 10^6$ V

(2) $R' = 2R = 5$ cm, the other magnitudes being unchanged.

$C = 6 \times 10^{-15}$ F

$\Delta t = 7{\cdot}3 \times 10^{-10}$ sec

$V^x = 1{\cdot}86 \times 10^6$ V

(3) $R = b = 0{\cdot}34$ cm, $R' = 5$ cm, $a = 0{\cdot}99$, the other magnitudes being the same as in example (1)

$B_l = 3400$ gauss, hence $B_0 = 3350$ gauss

$(dz/dt)_0 = 1{\cdot}45 \times 10^9$ cm/sec, hence

$t_0 = 6{\cdot}9 \times 10^{-8}$ sec

$i_0 = 47$ A

$W_m(t_0) = 7{\cdot}35 \times 10^{-2}$ W-sec

$L = 6{\cdot}6 \times 10^{-5}$ H

$C = 6 \times 10^{-15}$ F

$\Delta t = 10^{-9}$ sec

$V^x = 5 \times 10^6$ V

The pulsing system outside the tube may merely consist of an h.t. transformer, provided that the magnetic field B_0 in section 2 is chosen so as to enable the electrons to enter this section only when the voltage between cathode and tube reaches the peak value of the alternating high tension during half a cycle.

REFERENCES

[1] Lovell, B. "Electronics and their Application in Industry and Research," p. 443 (London: The Pilot Press, Ltd., 1947).

[2] Huber, H. and Kleen, W., *Arch. Elektrotech.*, June, 1949, Vol. 39, p. 394.

[3] Brillouin, L., *Phys. Rev.*, April, 1945, Vol. 67, p. 260.

[4] Convert, G., *Ann. Radioelect.*, October, 1949, Vol. 4, p. 279.

[5] Samuel, A. L., *Proc. Inst. Radio Engrs*, November, 1949, Vol. 37, p. 1252.

[6] Planck, M., "Theorie der Elektrizität und des Magnetismus," 3rd. ed., p. 20 (Leipzig: S. Hirzel, 1937).

[7] Zworykin, V. K., "Electron Optics and the Electron Microscope," p. 382 (London: Chapman & Hall, Ltd.).

[8] Plato, G., Kleen, W. and Rothe, H. Z., *Physik*, 1936, Vol. 101, p. 509.

[9] Fay, C. E., Samuel, A. L. and Shockley, W., *Bell Syst. tech. J.*, 1938, p. 49.

[10] König, H. W., *Hochfrequenztechtik u. Elektakustik*, 1943, Vol. 62, p. 76.

[11] Smith, L. P. and Hartman, P. L., *J. appl. Phys.*, March, 1940, Vol. 11, p. 225.

AMPLIFIER OF VARIABLE OUTPUT IMPEDANCE

By R. Yorke and K. R. McLachlan

1. Introduction

IN some recent experimental work a requirement arose for an audio-frequency power amplifier having a variable output impedance.

The characteristics of the load were such as to indicate that some range of negative impedance might be required. It was thought that the maximum range would be from -10 to $+20$ ohms, any set value being constant over the frequency range. In addition the frequency response characteristic had to be good enough to pass a low-frequency square waveform without distortion.

Since a large number of measurements were to be made with the aid of the amplifier it was evident that a simple and accurate means would have to be provided for determining the output impedance.

2. Method

Within the required range of output impedance any positive value may be obtained simply by connecting a known series resistance to a generator of zero impedance. The more difficult part of the range to achieve is therefore that between zero and -10 ohms.

A generator with negative output impedance has the characteristic that the output voltage and current rise when the load resistance is reduced. An amplifier having positive current feedback can bring about a characteristic of this kind, for in such an amplifier the gain is a direct function of the output current. At the same time negative voltage feedback may be applied to improve the frequency-response characteristic.

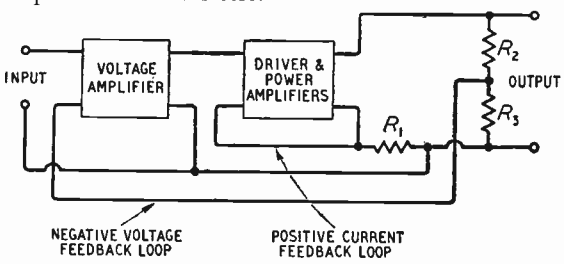

Fig. 1. *Block diagram of amplifier showing the feedback circuits.*

Fig. 1 shows a block diagram of the proposed feedback scheme. R_2 and R_3 form the potential divider for applying negative feedback, and R_1 the series resistance across which the positive current feedback is developed.

Preliminary experiments using a simple amplifier showed the scheme to be practicable, but in order to overcome some difficulties encountered it was proposed to employ balanced output stages. This arrangement offered a number of advantages, viz:

(i) the reduction of phase change and distortion in the output transformer at low frequencies,

(ii) the elimination of signal-frequency currents in the h.t. line,

(iii) the elimination of phase-change due to h.t. decoupling circuits.

Fig. 2 shows the detailed circuit diagram based upon Fig. 1. V_1 is a 6SJ7 pentode connected as a medium-μ triode giving a stage gain of 21 db. V_2 and V_3 are the two halves of a 6SC7 double triode, connected as a cathode-coupled phase inverter giving a stage gain of 22 db each side. This circuit is conventional except for the termination of C_2. V_4 and V_5 are 6V6 beam tetrodes, triode connected, working into a step-down matching transformer. At the output side of the transformer 2 W could be obtained without harmonic distortion. The output circuit consists of R_1, the current feedback resistor, R_4 the calibrated positive resistance and R_5 the checking resistance. V_6 amplifies and inverts the voltage developed across R_1, and feeds it into the side of C_2 which normally would be earthed. The position of the tapping on R_1 determines the proportion of this voltage which is fed back, and hence controls the degree of negative output impedance.

The negative feedback is applied to the cathode of V_1 in the usual manner and the consequent reduction in gain with no positive feedback is 34 db, at 500 c/s.

To permit this amount of negative feedback to be applied it was necessary to limit the gain of the amplifier at high frequencies where the phase change of the output transformer becomes excessive. This is achieved by the 15,000-ohms resistance and 160-pF capacitor connected across the grids of V_4 and V_5. Potential dividers are incorporated to balance both signal current and standing current in V_4 and V_5.

R_4 is a variable series resistance which provides the range of positive output impedance. It has a

MS accepted by the Editor, July 1950

calibrated dial and can be set accurately to any desired value. When using R_4 in this manner the impedance at CD must be set to zero. R_5 is used to determine when this is the case, for when R_4 is zero, the voltage at AB is identical with that at CD and does not change on applying R_5.

When, by adjustment of positive feedback the impedance at CD is made negative, the output impedance at AB may be brought to zero by adjustment of R_4. Thus the numerical value of the impedance at CD is then equal to the setting of R_4. When R_4 is returned to zero this known value of negative impedance appears at terminals AB. It is clear that R_4 provides a simple means of measuring both positive and negative values of output impedance.

It was later realized that the range of impedance could have been obtained more easily by setting the amplifier output impedance (at CD) permanently to -10 ohms, and making the maximum value of R_4 equal to 30 ohms. This would have the advantage that the whole range from -10 to $+20$ ohms could be covered using only one control. However, the principle employed would be identical with that outlined above.

3. Performance

The characteristics of the amplifier were investigated experimentally and the more important results are outlined below. Some of these are illustrated by means of photographically recorded oscillograms.

With the terminals AB open-circuited the frequency response at all values of output impedance was level within $\pm \frac{1}{2}$ db, from 20 c/s to 20,000 c/s. When fully loaded with 15 ohms, similar figures were obtained, except for the negative values of output impedance reaching the worst condition at -10 ohms. Here the characteristic was within $\pm \frac{1}{2}$ db, from 20 c/s to 10,000 c/s, after which a gradual droop occurred reaching -2 db at 20,000 c/s.

To illustrate the phase change through the amplifier a number of Lissajous figures are shown in Fig. 3. They also indicate how the phase change varies with change in output impedance and frequency.

In each case frequencies of 20, 200, 2,000 and 20,000 c/s were chosen and the amplifier loaded with 15 ohms, and measurements were made with the output impedance adjusted to -10, 0 and $+10$ ohms.

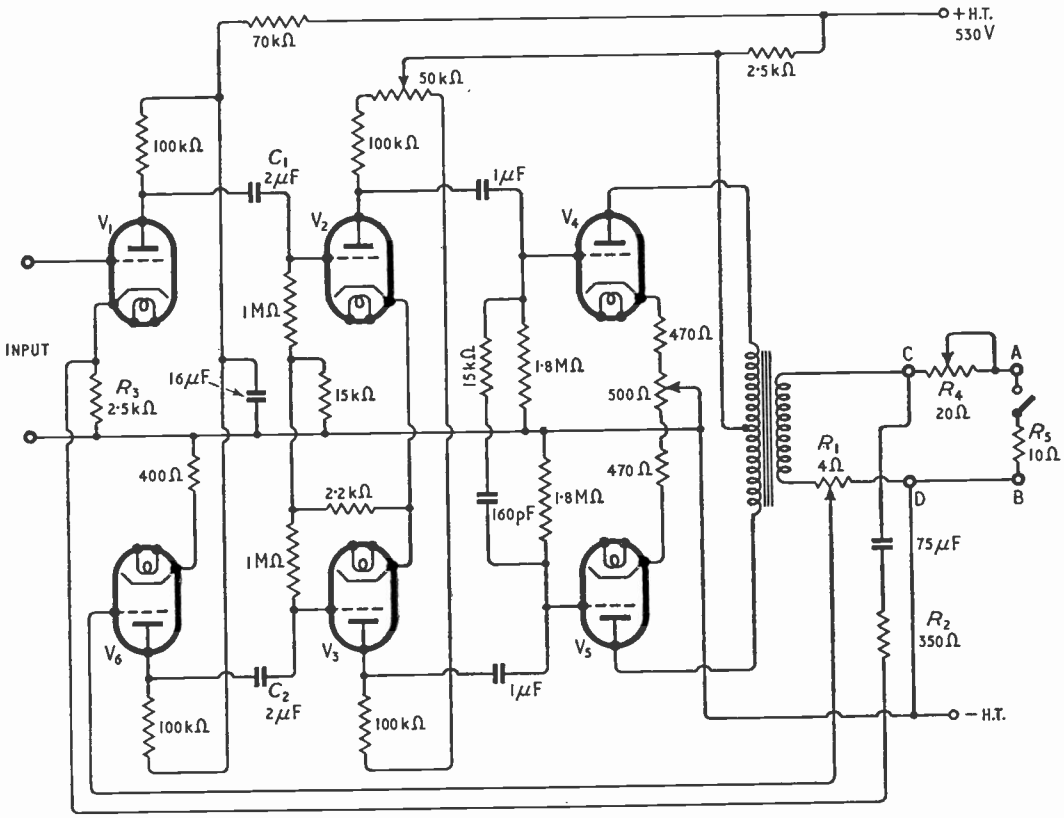

Fig. 2. *Circuit diagram of complete amplifier. R_1 and R_4 provide the adjustment of output impedance.*

The diagrams also indicate the performance of the amplifier in both frequency and amplitude distortion characteristics.

Fig. 4 shows the response of the amplifier to a square-wave input of frequency 10 c/s, for the same output impedance conditions. A small amount of differentiation of the waveform is noticeable in the case of an output impedance of − 10 ohms.

To illustrate the type of work for which this amplifier is being used, Fig. 5 is included. This shows the response of a series-resonant circuit when connected to the output terminals of the amplifier, operating with a square-wave input. The output impedances have been selected to provide under-critical, critical and over-critical damping.

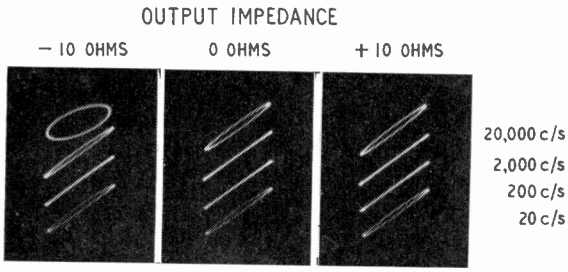

Fig. 3. *Lissajous figures at various frequencies for three values of output impedance.*

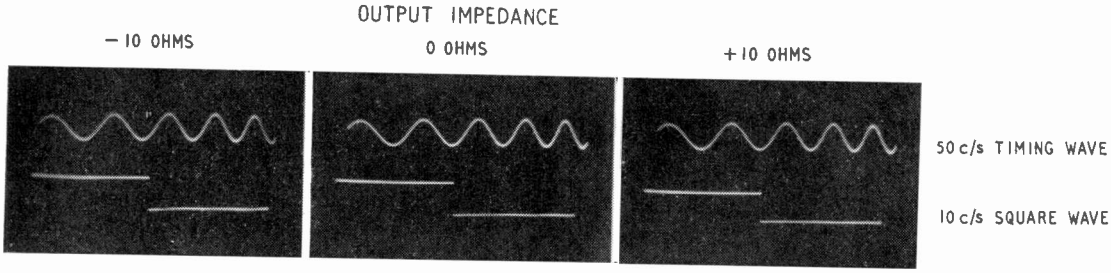

Fig. 4. *Response to a 10-c/s square wave.*

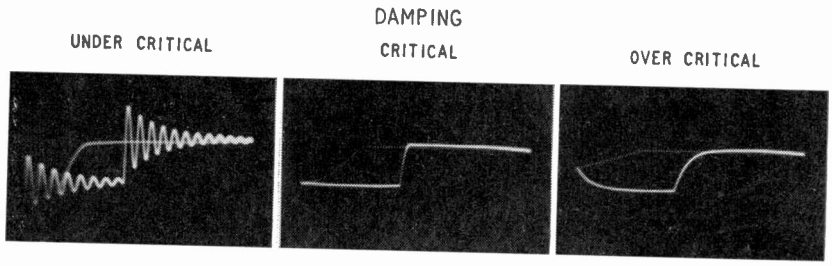

Fig. 5. *Response with series-resonant circuit as the load impedance of the amplifier.*

4. Conclusion

The limiting factor in the performance of the amplifier was found to be the output transformer. In particular, it limited the maximum value of negative output impedance obtainable while maintaining the stringent low-frequency response requirements. However, with a superior output transformer fitted to such an amplifier it should be possible considerably to extend the range of negative output impedance.

Similarly, if the frequency-response requirements were less stringent the present transformer could be retained and the amount of negative feedback reduced, again resulting in an increase of negative output impedance. See Appendix.

APPENDIX

For the purpose of analysis it is more convenient to calculate the impedance at the primary side of the output transformer, and later to refer this impedance into the secondary side.

Let A be the stage gain of V_1,
B the stage gain of V_2 (or V_3),
C the gain of the positive feedback loop,
μ the amplification factor of V_4 (or V_5),
e_g the signal voltage appearing at the grid of V_2 (or V_3).

Let the output stage be replaced by a generator of internal impedance R_a and of e.m.f. $B\mu e_g$ volts.

Let β be the gain of the negative-feedback loop,
R_1 the positive feedback resistor,
R_2 the negative feedback series resistor,
R_3 the input impedance at the cathode of V_1,
n the stepdown ratio of the output transformer.

Then $$\beta = \frac{R_3}{n(R_2 + R_3)}$$

and $C = \frac{1}{n} \times$ stage gain of V_6.

Suppose a generator of zero internal impedance and e.m.f. E volts be connected to the output of the amplifier; i.e., to the anodes of V_4 and V_5. Let this cause a current i amperes to flow. The output impedance is then given by $Z = \frac{E}{i}$ ohms. Considering the voltages acting in the output circuit, we have:—

(i) the e.m.f. due to the current feedback
$= iR_1CB\mu$ volts (+ ve)

(ii) the e.m.f. due to the voltage feedback
$= \beta EAB\mu$ volts (− ve)

(iii) the e.m.f. of the generator
$= E$ volts

Hence, total e.m.f. in the output circuit is:—

$$E + iR_1CB\mu + \beta EAB\mu \text{ volts.}$$

This e.m.f. is acting in a circuit of impedance $(R_a + R_1)$ ohms.

therefore: $$i = \frac{E + iR_1CB\mu + \beta EAB\mu}{(R_a + R_1)} \text{ amperes}$$

or: $$i(R_a + R_1) = E + iR_1CB\mu + \beta EAB\mu$$

or: $$i(R_a + R_1 - R_1CB\mu) = E + \beta EAB\mu$$

or: $$i[R_a + R_1(1 - CB\mu)] = E(1 + \beta AB\mu)$$

Hence, $$Z = \frac{E}{i} = \frac{R_a + R_1(1 - CB\mu)}{1 + \beta AB\mu} \text{ ohms.}$$

The output impedance becomes positive, zero or negative according to whether $(R_a + R_1)$ is greater than, equal to, or less than $R_1CB\mu$ and is also approximately inversely proportional to β, since $\beta AB\mu \gg 1$.

Referring Z into the secondary side of the transformer:—

$$Z_o = \frac{1}{n^2} \cdot \frac{R_a + R_1(1 - CB\mu)}{1 + \beta AB\mu} \text{ ohms.}$$

CORRESPONDENCE

Letters to the Editor on technical subjects are always welcome. In publishing such communications the Editors do not necessarily endorse any technical or general statements which they may contain.

Narrow-Pulse Generator

SIR,—With reference to C. S. Fowler's article in the October/November issue of *Wireless Engineer*, it would appear that the factors limiting the useful frequency range of this type of generator may not be fully appreciated.

Earlier descriptions of the operation of this type of pulse generator have assumed the thyratron to behave as a perfect switch and the pulse produced to be of the form of a rapidly decaying exponential with time-constant equal to that of the differentiating circuit. While this simplifying assumption can give an accurate estimate of the energy per unit bandwidth in the pulse spectrum at low frequencies, it cannot predict the distribution at higher frequencies. To describe the energy distribution at higher frequencies it is necessary to recognize that the thyratron will take a finite time to operate and to fit a suitable function to the voltage waveform at the anode.

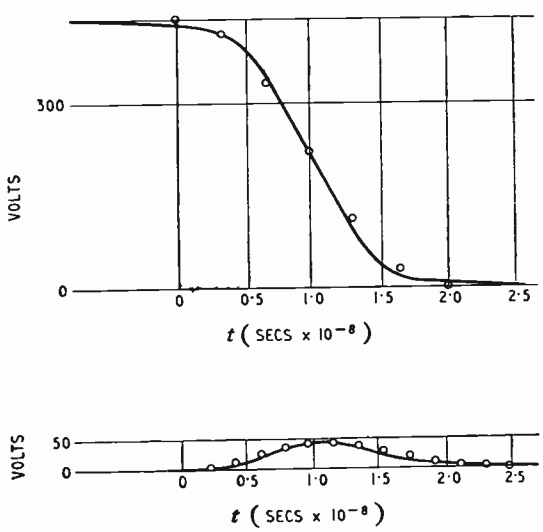

Figs. 1 and 2.

The form of the voltage wave at the thyratron anode and also the pulse at the output of the differentiating circuit were obtained on a high-speed oscillograph and tracings of these are shown in Figs. 1 and 2 respectively. The circles show the values calculated from the fitting of a simple function to the anode wave. The distribution of energy in the pulse spectrum as measured on a constant-bandwidth receiver is shown by the circles in Fig. 3. The full line in this figure shows the calculated response.

A function which fits closely the anode wave of the thyratron is $(1 - \cos \omega_0 t)$ and the waveform may be written as $$F(t) = \frac{E_0}{2}[(1 - \cos \omega_0 t)\ u(t) + \{1 - \cos(\omega_0 t - \pi)\}\, u(t - \pi/\omega_0)]$$

Where E_0 = total excursion of anode voltage;

$u(t - \tau) = 0$ for $t < \tau$
$= 1$ for $t \geqslant \tau$

and ω_0 is the angular frequency which best fits the observed waveform during the period of rapid potential fall. This value of ω_0 is obtained by taking $2/E_0$ times the largest value (volts/sec) of the slope of the curve in Fig. 1.

If $F(t)$ is applied to the differentiating circuit the complex frequency spectrum of the voltage pulse generated across the output resistance will be given by the product of the Laplace transform of $F(t)$ and the voltage-transfer function of the circuit. The complex frequency function for the pulse may therefore be written as—

$$\phi(p) = \frac{E_0}{2} \frac{\omega_0^2}{(p^2 + \omega_0^2)} \cdot \frac{(1 + e^{-p\pi/\omega_0})}{(p + \gamma)}$$

where $1/\gamma$ = time constant of the differentiating circuit.

If γ and ω_0 are large compared with p then $\phi(p)$ approximates to $E_0\, CR$ volts per unit bandwidth.

The amplitude of the response of a bandpass amplifier to $\phi(p)$ is given by $A \int_{\omega_1}^{\omega_2} \phi(p)\, dp$

where ω_1 and ω_2 are the effective band limits and A is the gain of the amplifier, assumed constant between ω_1 and ω_2 and zero outside this range. The response of such an amplifier at low frequencies to the present pulse is therefore $E_0\, CR\, (\omega_1 + \omega_2)$ when referred to its input terminals $(A = 1)$.

The voltage pulse across the output resistance is given by the inverse transform of $\phi(p)$; i.e.,

$$V(t) = \frac{E_0}{2} \cdot \frac{\omega_0^2}{\omega_0^2 + \gamma^2} [e^{-\gamma t} + \gamma/\omega_0 \sin \omega_0 t - \cos \omega_0 t] \, u(t)$$

plus a similar expression in $(t - \pi/\omega_0)$.

Comparisons of the calculated with the measured values show very close agreement (see Figs. 2 and 3).

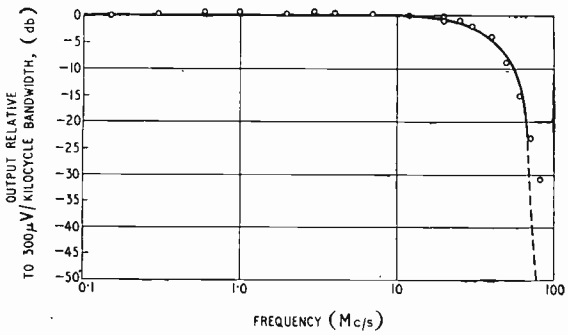

Fig. 3.

It is clear, therefore, that so long as γ is made very large the duration and shape of the pulse are controlled by the characteristics of the thyratron. Thus, to produce pulses of shorter duration by this method, it will be necessary to develop a thyratron having a more rapid breakdown than the one at present available. A slight increase in the speed of operation of the present thyratron may be obtained by increasing the cathode temperature and by raising the anode voltage, but such increase in speed will be small and limited by the safe operating conditions of the tube. Considerable reduction in the anode voltage is known to increase the operating time appreciably. Considerably faster pulses can, of course, be obtained from generators using spark gaps or special forms of mechanical switches.

S. F. Pearce
D. C. G. Smith.

The Electrical Research Association,
Greenford, Middlesex.
27th April, 1951.

Sir,—In connection with my paper, "A Narrow Pulse Generator," which appeared in the October/November 1950 issue, I would like to remove a misapprehension that has arisen over the statement in section 5 with regard to the capabilities of the high-speed oscillograph.

In the second paragraph comparison was made between the length and amplitude of the output pulse as seen on the oscillograph and the characteristics of the pulse which would theoretically exist at point X, Fig. 1 of my article, on the assumption that the thyratron functioned as a perfect switch.

The greater length of the measured pulse was due to two causes:

(*a*) The inductance and capacitance to ground of all connections between point X and the oscillograph plates, as well as the capacitance of the plates themselves, for which the term 'oscillograph circuit' was used, although it was realized that the major portion of these impedances occurred in the connecting leads.

(*b*) The finite time required for the thyratron current to reach its maximum value.

It was thought at the time of writing that the first effect was the main cause of the longer pulse. However, recent measurements made by S. F. Pearce and D. C. G. Smith show that the rate of fall of anode voltage produced on the ionization of a 2D21 thyratron is such that when this voltage change is applied to the RC network of the generator the pulse at point X will be appreciably longer than 0·001 μsec.

It seems, therefore, that it is this effect which primarily determines the minimum pulse length obtainable.

Attention is also drawn to an error in line 4 on page 266. The limiting values for the normal ionization time of the 2D21 thyratron should be 0·5 and 1 μsec.

C. S. Fowler.

Radio Research Station,
Slough, Bucks.
9th May, 1951.

Impedances in Parallel

Sir,—I was interested to read the recent correspondence, which appeared in the January and April 1951 issues of your journal, on geometrical constructions for obtaining the resultant of two impedances connected in parallel.

The method described by Mr. Batchelder (April, p. 128) is particularly elegant. I would point out, however, that it is not necessary to resort to analytical techniques to prove its validity, as the following simple geometrical argument shows:—

Referring to the original diagram of his letter, denote the terminating points of vectors Z_1, Z_2 and Z_0 by A, B, C, respectively. Join AC, BC.

Then, since BO is a tangent to circle OCA,

$\widehat{BOC} = \widehat{OAC}$ (alternate segment theorem)

similarly $\widehat{CBO} = \widehat{COA}$ (AO tangent to circle OCB)

Hence triangles BOC and OAC are similar.

Therefore, $\frac{AC}{OC} = \frac{OC}{BC}$

and $\widehat{ACO} = \widehat{BCO}$

These two facts may be conveniently expressed by the single complex equation

$$\frac{Z_0 - Z_1}{Z_0} = \frac{Z_0}{Z_0 - Z_2} \quad \text{(the vector AC is } Z_0 - Z_1\text{)}$$

This becomes $Z_0^2 = Z_0^2 - Z_0(Z_1 + Z_2) + Z_1 Z_2$

from which the desired result follows,

$$Z_0 = \frac{Z_1 Z_2}{Z_1 + Z_2}.$$

M. O. Deighton.

Electronics Branch,
National Research Council,
Ontario, Canada.
11th May, 1951.

Induced Grid Noise in Triodes

Sir,—Recently Bell[1] presented a formula for induced grid noise in triodes and pentodes which agrees fairly well with experiment. With the help of the Llewellyn-Peterson[3] theory of u.h.f. vacuum tubes an extension of Bell's formula will be given which agrees even better with experiment. We introduce the following notation for a triode:

d_m = distance between potential minimum and cathode
d_1 = distance between grid and cathode
d_2 = distance between grid and anode
V_e = equivalent voltage in grid plane
V_a = anode voltage
$-V_m$ = potential at the potential minimum

$\frac{\pi}{4} V_T = \frac{\pi}{4} kT_c/e$ = average velocity of the electrons at the potential minimum in volts (T_c = cathode temperature)

g_m = l.f. transconductance

τ_1 = transit time from potential minimum to grid

τ_2 = transit time from grid to anode

$C_{cg} = \epsilon_0 A/d_1$ = cold capacitance between cathode and grid

$C_{ag} = \epsilon_0 A/d_2$ = cold capacitance between grid and anode

$C' = \frac{\epsilon_0 A}{(d_1 - d_m)} = C_{cg} \frac{d_1}{(d_1 - d_m)}$ cold capacitance between potential minimum and grid.

If $\frac{\pi}{4} kT_c/e \ll V_e$, as usually will be the case:

$$\tau_1 = \frac{3(d_1 - d_m)}{\sqrt{\frac{2e}{m}}\left(\sqrt{\frac{\pi}{4} V_T} + \sqrt{V_e + V_m}\right)};$$

$$\tau_2 = \frac{2d_2}{\sqrt{\frac{2e}{m}}\left(\sqrt{V_e + V_m} + \sqrt{V_a + V_m}\right)}$$

If a signal $V(t)$ is applied between grid and cathode then the following signal currents flow in the tubes:

$$I_1(t) = \frac{g_m}{\phi_6(\beta_1)} V(t) \quad \ldots \quad (1)$$

is the current flowing from cathode to grid where

$$\phi_6(\beta) = \frac{12}{\beta^4}\left(\frac{\beta^3}{6} - \beta + 2 - \beta e^{-\beta} - e^{-\beta}\right) \text{ and } \beta_1 = j\omega\tau_1$$

At very high frequencies ($|\beta_1| \gg 1$) (1) reduces to:

$$I_1(t) = \frac{1}{2} g_m \beta_1 V(t) = j\omega \frac{\epsilon_0 A}{(d_1 - d_m)} V(t) = j\omega C' V(t) \quad (1a)$$

as can be found from the definition[3] of g_m, so that $I_1(t)$ incorporates the corresponding capacitive current $j\omega C' V(t)$.

$$I_2(t) = g_m \frac{\phi_3(\beta_1)}{\phi_6(\beta_1)} \phi_3(\beta_2) V(t) - j\omega C_{ag} V(t) \quad \ldots \quad (2)$$

is the current flowing from grid to anode, where

$$\phi_3(\beta) = \frac{2}{\beta^2}\left[1 - e^{-\beta} - \beta e^{-\beta}\right] \text{ and } \beta_2 = j\omega\tau_2$$

Consequently a current $\{I_1(t) - I_2(t)\}$ flows to the grid

$$\left\{I_1(t) - I_2(t)\right\} = g_m\left[\frac{1}{\phi_6(\beta_1)} - \frac{\phi_3(\beta_1)}{\phi_6(\beta_1)} \phi_3(\beta_2)\right] V(t)$$
$$+ j\omega C_{ag} V(t) = \left[Y_e + j\omega C_{cg} + j\omega C_{ag}\right] V(t) \quad (3)$$

This introduces the input admittance Y_e due to space charge. Y_e consists of a capacitance C_e in parallel with a conductance $1/R_e$. At moderately high frequencies C_e is independent of frequency and $1/R_e$ varies as ω^2. A series expansion of (3) gives the following formula:

$$j\omega C_e = g_m\left[\frac{2}{3} j\omega\tau_1 + \frac{2}{3} j\omega\tau_2 - j\omega C_{cg}\right]$$

and as $j\omega C' = \frac{1}{2} g_m j\omega\tau_1$ and $C' = C_{cg}\left(\frac{d_1}{d_1 - d_m}\right)$ we may write:

$$\omega C_e = g_m\left[\frac{1}{6}\omega\tau_1 + C_{cg}\frac{d_m}{d_1 - d_m} + \frac{2}{3}\omega\tau_2\right]$$
$$= g_m\left[\frac{1}{6}\omega\tau_1 + \frac{1}{2}\omega\tau_1\left(\frac{d_m}{d_1}\right) + \frac{2}{3}\omega\tau_2\right] \quad (4)$$

according to (1a).

As far as noise is concerned, a noise current:

$$i_1 = i_o \frac{\phi_3(\beta_1)}{\phi_6(\beta_1)} \quad \ldots \quad (5)$$

flows from cathode to grid and a noise current i_2 flows from grid to anode

$$i_2 = i_o\left[\frac{1}{3}\beta_1 e^{-\beta_1} + \frac{\{\phi_3(\beta_1)\}^2}{\phi_6(\beta_1)}\phi_3(\beta_2)\right] \quad (6)$$

where i_0 is the l.f. Fourier component of the noise current.

At high frequencies a noise current $(i_1 - i_2)$ flows to the grid of the triode, this is the 'induced grid noise'. At moderately high frequencies we can use a series expansion of (5) and (6) and obtain:

$$\overline{(i_1 - i_2)^2} = \overline{i^2_o}\,\frac{1}{9}\left(\omega\tau_1\right)^2\left(1 + 2\frac{\tau_2}{\tau_1}\right)^2 \quad \ldots \quad (7)$$

Eliminating the expression $\frac{1}{9}\omega^2\tau_1^2$ with the help of (4) we obtain:

$$\overline{(i_1 - i_2)^2} = \overline{i_0^2}\,\frac{(\omega C_e)^2}{g_m^2} \cdot \left\{\frac{1 + 2\frac{\tau_2}{\tau_1}}{\frac{1}{2} + \frac{3}{2}\frac{d_m}{d} + 2\frac{\tau_2}{\tau_1}}\right\}^2 \quad (8)$$

Except for the factor between brackets this is Bell's result. This factor varies slowly; its value is equal to unity if $(d_m/d) = 1/3$ and it increases slowly with increasing current. This explains why Bell's original formula gives too large a value of $\overline{(i_1 - i_2)^2}$ for low anode currents and too small a value for large anode currents.

The above analysis thus shows that Bell's formula is a direct consequence of the Llewellyn-Peterson theory. Its importance stems from the fact that it only contains measurable quantities. Even though it is true that some of the results of the Llewellyn-Peterson analysis do not hold so well for relatively small values of V_e, the above formula (8) seems to be quite correct, presumably because most of the errors cancel out.

Though Bell's method happens to give proper results for space-charge limited valves, it is in general not allowed to treat the influence of space-charge and transit times in radio valves as a feedback phenomenon; it leads to serious errors in temperature-limited triodes. In such triodes C_e may be zero and $\overline{(i_1 - i_2)^2}$ still may have an appreciable value as was shown by Bakker[2] for the octode EK3. The method should, therefore, be used with great care and it is usually safer to use the Llewellyn-Peterson theory. Mr. Bell's analysis has the great merit, however, of having uncovered a formula which would have been very difficult to find otherwise.

A. VANDERZIEL.

Dept. of Electrical Engineering,
University of Minnesota,
Minneapolis, U.S.A.
22nd May, 1951.

[1] R. L. Bell, *Wireless Engineer*, Vol. 27, p. 86, 1950.
[2] C. J. Bakker, *Physica*, Vol. 8, p. 28, 1941.
[3] F. B. Llewellyn and L. C. Peterson, *Proc. Inst. Radio Engrs*, Vol. 32, p. 144, 1944.

INSTITUTION OF ELECTRONICS

The sixth annual Electronics Exhibition, organized by the North-Western Branch of the Institution of Electronics, will be held at the College of Technology, Manchester, on 24th July (2.30-9 p.m.) and 25th and 26th July (10 a.m.-9 p.m.). Admission tickets are obtainable from W. Birtwistle, Hon. Secretary, N.W. Branch, Institution of Electronics, 17 Blackwater Street, Rochdale, Lancs.

NEW BOOKS

Telecommunications Principles

By R. N. Renton. Pp. 450+xiii, with 673 illustrations. Sir Isaac Pitman & Sons, Ltd., Parker Street, Kingsway, London, W.C.2. Price 37s. 6d.

The author is an executive engineer in the General Post Office, and H. Faulkner, the Deputy Engineer-in-Chief, has contributed a foreword. The book has been written for the less mathematically-minded student, and is planned to include all items in the City and Guilds Examination syllabus in Telecommunications (Principles) Grades I, II, and III. With the exception of dy/dx as a symbol for the rate of change, differential and integral calculus have been excluded from the text, but there is a nine-page appendix containing some calculus and the necessary trigonometry and vector algebra.

In the preface the author says that, in the interests of accuracy, all terms, definitions, symbols, and abbreviations have been taken from the following publications, and he then gives a list of British Standard glossaries. In one of them, viz., No. 205 of 1943 and in all subsequent glossaries, the symbol for electric force is given as the capital script $\mathcal{E}$ to distinguish it from E, which is used for e.m.f., but in some of the earlier glossaries, owing to a printer's error, the symbol given was the small Greek epsilon ϵ. The author says that he uses the symbols of No. 560 of 1934, which contained this error, but he does not do so. In the list of symbols and throughout the book he uses for electric force the small Greek Xi, ξ, which so far as we know, has never been suggested in any British Standard publication. Apart from this, there is a praiseworthy adherence to standard symbols and abbreviations.

The book is divided into 14 chapters and several appendices. The opening chapter on Electrons gives a brief account of atomic structure and the various constituents. The statement that when a solid passes into the liquid state, the molecules are *less tightly packed* is doubtless true from one point of view, but it must not be forgotten that, when ice melts, the water occupies less space than the ice. Chapter 2 on the D.C. Circuit starts at the beginning with water analogies and explains the laws of Ohm and Kirchhoff. Here, as throughout the book, the practical side is emphasized and photographs are given showing resistance boxes and different types of resistors. A considerable part of the book is devoted to the working out of numerical examples, taken almost entirely from City and Guilds Examination papers in Telecommunication subjects. Each chapter concludes with a summary of the units and terms that have been introduced in the chapter. On p. 19 curves are given showing the variation of resistance with current in a barretter with a tungsten filament, but, in the absence of any attempt to explain them, these can only mystify the student.

Chapter 3 deals with power and energy, and Chapter 4 with cells, both primary and secondary. Chapter 5 on Electrostatics goes very fully into the construction of various types of capacitors. The author seems very confused about electric flux. On p. 96 he says correctly that "the total flux displaced across a surface enclosing a charge is equal to the charge." He then says that the unit of electric flux is "that flux which exists at a point 1 cm from a unit charge," whatever that may mean, and then "a charge of Q e.s.u. would therefore produce $4\pi Q$ flux lines." This must prove very bewildering to a student. In the summary on p. 119 he says that permittivity is "the ratio of flux density produced in the given medium to that produced in free space by the same electric force $\kappa = D/\xi$." Here again two different things are muddled together; the definition is of relative permittivity, but the symbols refer to absolute permittivity, which will depend on the units employed. The confusion in this chapter is mainly due to the fact that Maxwell's total electric flux was equal to the charge, whereas in the magnetic case the total flux is 4π times the magnetic charge or pole strength unless one adopts the rationalized system. As defined by Maxwell, the electric case was already rationalized.

Chapter 6 is devoted to magnetism and here again there is a looseness about the use of the word flux; on p. 128 we read that the unit of flux density is the flux which exists at a point 1 cm distant from a unit pole. On p. 132 we are told that a rod of diamagnetic material would tend to set itself at right angles to the direction of the magnetic field. This hoary fallacy was exploded a century ago; at the British Association meeting at Belfast in 1852 Kelvin said that "what is known with certainty regarding magnetic induction and magnetic action generally shows that an elongated mass in a uniform magnetic field tends to place its length parallel to the lines of force whether its inductive capacity be ferromagnetic or diamagnetic." Our editorial article for March 1949 was devoted to this subject.

We note that on p. 136 resistivity is expressed in $\mu\Omega$ per cm^3, which suggests that it is a matter of volume; the $\mu\Omega$/cm-cube on p. 11 is a safer abbreviation. In chapter 7 on Electromagnetism, self-inductance is defined on p. 170 as "the property of a circuit by virtue of which self-induction occurs." This reminds one of the definition of an archdeacon as a person who exercised archi-diaconal functions. On p. 178 of chapter 8 on Generators, in connection with commutation we are told that the armature, *running in an intense magnetic field*, possesses considerable self-inductance, but no explanation is given of the way in which the intense field influences the self-inductance of the armature winding. Chapter 9 on Motors is confined wisely to d.c. motors, but the preceding chapter, also wisely, dealt briefly with a.c. generators. Chapter 10 deals very thoroughly with the fundamental principles of alternating currents, but the transformer is reserved for the following chapter on A.C. Transmission. Having consistently used the standard symbols V and E for p.d. and induced e.m.f. respectively, it is a pity that the author departs from it in dealing with transformers and applies a voltage E_p to the primary winding, with the result that E_p and E_s are 180 degrees out of phase. Chapter 12 on Meters and Measuring Instruments is very well illustrated. Chapter 13, entitled Electronics, is devoted to valves of all types, their construction, characteristics and applications, various types of modulation, rectifiers, including copper oxide and selenium, photo-electric cells, and cathode-ray tubes. The final chapter is devoted to sound, the ear, waveforms, transmitters and receivers, piezo-electricity, and crystal filters.

The book is very well produced, with very clear type and excellent diagrams and photographs.

G. W. O. H.

Electromagnetic Fields ; Vol. 1—Mapping of Fields

By Ernest Weber. Pp. 590 + xiv. Chapman & Hall, Ltd., 37 Essex St., London, W.C.2. Price 80s.

A Sequential Inspection Plan for Radio Interference Testing, with Special Reference to Discontinuous Interference

By S. F. Pearce and H. Goldenberg. E.R.A. Technical Report M/T100. Pp. 24. Price 12s. (post 3d.).

ABSTRACTS and REFERENCES

Compiled by the Radio Organization of the Department of Scientific and Industrial Research, and published by arrangement with that Department.

The abstracts are classified in accordance with the Universal Decimal Classification. They are arranged within broad subject sections in the order of the U.D.C. numbers, except that notices of book reviews are placed at the ends of the sections. U.D.C. numbers marked with a dagger (†) must be regarded as provisional. The abbreviations of the titles of journals are taken from the World List of Scientific Periodicals. Titles that do not appear in this List are abbreviated in a style conforming to it.

	PAGE A
Acoustics and Audio Frequencies	121
Aerials and Transmission Lines	122
Circuits and Circuit Elements	123
General Physics	125
Geophysical and Extraterrestrial Phenomena	127
Location and Aids to Navigation	129
Materials and Subsidiary Techniques	130
Mathematics	132
Measurements and Test Gear	133
Other Applications of Radio and Electronics	135
Propagation of Waves	136
Reception	137
Stations and Communication Systems	138
Subsidiary Apparatus	139
Television and Phototelegraphy	139
Transmission	140
Valves and Thermionics	140
Miscellaneous	140

ACOUSTICS AND AUDIO FREQUENCIES

016 : 534 **1541**

References to Contemporary Papers on Acoustics.—A. Taber Jones. (*J. acoust. Soc. Amer.*, Jan. 1951, Vol. 23, No. 1, pp. 121–129.) Continuation of 1042 of May.

534.21 **1542**

On the Propagation of Sound over Great Distances.—J. Veldkamp. (*J. atmos. terr. Phys.*, 1951, Vol. 1, No. 3, pp. 147–151.) The surface energy density of the abnormal sound from big explosions is calculated for a particular vertical temperature distribution in the atmosphere. The calculations indicate that waves with frequencies as low as 0·1 c/s can be reflected strongly from an ionosphere layer at a height of 170 km. Measurements by Cox et al. on abnormal sound from the Heligoland explosion are in agreement with this conclusion. Waves with frequencies > 70 c/s are almost totally absorbed in the upper stratosphere. It is suggested that accurate measurements of the travel time and intensity of abnormal sound could be used to obtain information on the temperature and pressure in the ionosphere.

534.22 **1543**

Asymptotic Approximation for the Normal Modes in Sound-Channel Wave Propagation.—N. A. Haskell. (*J. appl. Phys.*, Feb. 1951, Vol. 22, No. 2, pp. 157–168.) Asymptotic methods are used to find approximate solutions of the acoustic wave equation in a medium in which the velocity is a continuously variable function of one coordinate. When the velocity function has a minimum, undamped normal-mode solutions exist and are closely analogous to the internally reflected waves in the case of a medium made up of discrete layers. By converting the sum of the high-order normal modes into an equivalent integral, superposition of these modes leads to geometrical ray theory modified by diffraction in a manner that may be computed from the incomplete Fresnel and Airy integrals.

534.321.9 **1544**

Ultrasonic Generators for High Powers.—B. E. Noltingk. (*J. Brit. Instn Radio Engrs*, Jan. 1951, Vol. 11, No. 1, pp. 11–19. Discussion, pp. 20–21.) Some common piezoelectric and magnetostrictive types of ultrasonic generator are described; theory is discussed briefly. Applications for which generators have been specially designed include flaw detection, aluminium soldering, and therapy.

534.321.9 : 534.22-16 **1545**

Improved Methods for Measuring Ultrasonic Velocity.—G. W. Willard. (*J. acoust. Soc. Amer.*, Jan. 1951, Vol. 23, No. 1, pp. 83–93.) Full paper. Summary abstracted in 516 of March.

534.321.9 : 534.231 **1546**

Piston Source at High Frequencies.—A. O. Williams, Jr. (*J. acoust. Soc. Amer.*, Jan. 1951, Vol. 23, No. 1, pp. 1–6.) For a circular plane piston of radius a, producing an ultrasonic beam with propagation constant $k(= 2\pi/\lambda)$, an expression is derived for the velocity potential, averaged with respect to magnitude and phase over a 'measurement circle' of area equal to that of the piston and centred in the beam. The expression should be highly accurate for $ka \geqslant 100$, at distances z from the source such that $(z/a)^3 \geqslant ka$; it agrees well with results computed in another way by Huntington, Emslie & Hughes (2479 of 1948). The assumption that relatively near the source there is a collimated beam of plane waves is shown to be not very accurate; the averaged radiation pressure falls off monotonically over all distances considered. The velocity potential at the rim of the 'measurement circle' is also computed and compared with the value deduced on the plane-wave assumption.

534.321.9 : 534.231-14 **1547**

Experimental Determination of Acoustic Wave Fronts.—P. Tamarkin, G. L. Boyer & R. T. Beyer. (*J. acoust. Soc. Amer.*, Jan. 1951, Vol. 23, No. 1, pp. 7–11.) Full paper. Summary abstracted in 517 of March.

534.321.9 : 534.373-14 **1548**

On the Dispersion and Absorption of Supersonic Waves in Water.—B. B. Ghosh. (*Indian J. Phys.*, Jan. 1950, Vol. 24, No. 1, pp. 1–12.) Theoretical expressions for dispersion and absorption in water are derived and found in good agreement with experimental results. Calculation indicates that the dispersion region for liquids such as water is in the neighbourhood of 1–10 kMc/s.

534.321.9 : 534.373-14 **1549**

Ultrasonic Absorption Measurements in Aqueous Solutions of Magnesium Sulfate.—M. C. Smith, R. E. Barrett & R. T. Beyer. (*J. acoust. Soc. Amer.*, Jan. 1951, Vol. 23, No. 1, pp. 71–74.) Full paper. Summary abstracted in 530 of March.

534.321.9 : 534.373-14 **1550**

Ultrasonic Absorption in Liquids.—C. J. Moen. (*J. acoust. Soc. Amer.*, Jan. 1951, Vol. 23, No, 1, pp. 62–70.) Full paper. Summary abstracted in 531 of March.

534.321.9 : 537.228.1 **1551**

Crystal Systems with Low Loss.—R. B. Fry & W. J. Fry. (*J. appl. Phys.*, Feb. 1951, Vol. 22, No. 2, pp. 198–200.) Approximate formulae are derived for computing the effect of mechanical resistance on the electrical characteristics of a piezoelectric-crystal system, for the case of a general reactive termination and low loss. Values of quality factor and of $\Delta f/f_r$ (Δf = difference between resonance frequency f_r and antiresonance frequency) obtained from the formulae are compared with the results of exact calculations for quartz/Hg and ADP/Hg systems.

534.321.9 : 537.228.1 **1552**

Variable Resonant Frequency Crystal Systems.—W. J. Fry, R. B. Fry & W. Hall. (*J. acoust. Soc. Amer.*, Jan. 1951, Vol. 23, No. 1, pp. 94–100.) Full paper. Summary abstracted in 525 of March.

534.374 : 534.75 **1553**

Acoustic Filters as Ear Defenders.—J. Zwislocki. (*J. acoust. Soc. Amer.*, Jan. 1951, Vol. 23, No. 1, pp. 36–40.) Special ear plugs incorporating low-pass filters are described which afford protection against excessive noise while admitting part of the spectrum of speech frequencies.

534.41 : 621.317.757 **1554**

Analysis of a Spectrum of Very Low Frequencies by means of Magnetic Tone-Frequency Equipment.—Weber. (See 1720.)

534.612 **1555**

Absolute Measurement of Sound Pressures at High Frequency.—V. Timbrell. (*Nature, Lond.*, 24th Feb. 1951, Vol. 167, No. 4243, pp. 306–307.) Description of a method using a Mach-Zehnder type of optical interferometer with a light beam of limited width.

534.7 : 611.85 **1556**

The Coarse Pattern of the Electrical Resistance in the Cochlea of the Guinea Pig (Electroanatomy of the Cochlea).—G. v. Békésy. (*J. acoust. Soc. Amer.*, Jan. 1951, Vol. 23, No. 1, pp. 18–28.)

534.7 : 611.85 **1557**

Microphonics produced by touching the Cochlear Partition with a Vibrating Electrode.—G. v. Békésy. (*J. acoust. Soc. Amer.*, Jan. 1951, Vol. 23, No. 1, pp. 29–35.)

621.395.623.7.094.3 **1558**

The Origin of Nonlinear Distortion in Electroacoustic Transducers.—E. Hüttmann. (*Elektrotechnik, Berlin*, Sept. 1950, Vol. 4, No. 9, pp. 322–325.) Discussion shows that in a.f. amplifiers the distortion can be kept small without much difficulty, and that in order to radiate sound with minimum distortion, division of the frequency range among several loudspeakers is necessary. Even for modest requirements, separation of the high-tone and low-tone loudspeakers is essential.

621.395.625.2/.3 + 681.85 **1559**

Recorders and Reproducers.—J. Moir. (*FM-TV*, Jan. 1951, Vol. 11, No. 1, pp. 14–15, 28.) An account of recording equipment and techniques used by the B.B.C. and short descriptions of two British lightweight pickups, the E.M.I. Type 12 and the Decca Type XMS.

621.395.625.3 **1560**

Magnetic Recording Systems in Product Design.—A. E. Javitz. (*Elect. Mfg, N.Y.*, Feb. 1950, Vol. 45, No. 2, pp. 74–81. .204.) A survey of design progress to date and a discussion of applications, including experimental use for recording signals other than sound, e.g., signals for controlling the operation of production machinery.

534 **1561**

Fundamentals of Acoustics. [Book Review]—L. E. Kinsler & A. R. Frey. Publishers: J. Wiley, New York, 1950, 499 pp., $6.00. (*J. Soc. Mot. Pict. Televis. Engrs*, Jan. 1951, Vol. 56, No. 1, p. 130.) "The authors have maintained a very good balance between the fundamental aspects of the physics of the problems and the engineering applications . . . Should serve as a very useful text in senior college and graduate classes."

534 **1562**

Wave Motion and Sound. [Book Review]—R. W. B. Stephens & A. E. Bate. Publishers: Arnold & Co., London, 448 pp., 45s. (*Brit. J. appl. Phys.*, Jan. 1951, Vol. 2, No. 1, p. 27.) "This book provides a comprehensive, reliable and attractive degree course."

AERIALS AND TRANSMISSION LINES

621.392.21.011.2 : 621.3.013.78† **1563**

Radiation from Resonant Quarter-Wave Transmission Lines.—F. M. Leslie. (*Wireless Engr*, March 1951, Vol. 28, No. 330, pp. 70–72.) The input conductance at resonance of three balanced $\lambda/4$ transmission lines of different spacings was measured at 100 Mc/s, and the effect of screening by metal sheets and troughs at various distances from the lines was observed. Results are shown graphically.

621.392.26† : 621.3.09 **1564**

Propagation Characteristics in a Coaxial Structure with Two Dielectrics.—A. Baños, Jr, D. S. Saxon & H. Gruen. (*J. appl. Phys.*, Feb. 1951, Vol. 22, No. 2, pp. 117–123.) For a given TM mode, the pertinent parameters are the ratio of the dielectric constants of the two media, the ratio of the two radii, and the operating frequency. As previously pointed out by Frankel (22 of 1948) and by Bruck & Wicher (334 and 1555 of 1948), it is found that the phase velocity for a given mode may lie between the phase velocities corresponding to each of the two unbounded dielectrics and that, by proper choice of parameters, it is always possible to obtain a phase velocity of a preassigned value higher than the lower of the velocities for the two unbounded media. This suggests the possibility of using such structures in linear accelerators. The results of extensive computations are given in families of curves showing the dependence of the propagation constant and of the phase velocity on the parameters of chief interest. The power flow and field distribution are also discussed.

621.392.26† : 621.317.34 **1565**

Power Adjustment for Plane Waves in Waveguides.—H. F. Mataré. (*Frequenz*, Dec. 1950, Vol. 4, No. 12, pp. 321–328.) Description of attenuators and methods developed for their calibration and for sensitivity measurements in rectangular waveguides at 3-cm wavelength. Sliders form a capacitive (or inductive) discontinuity in the waveguide cross-section and are

decoupled at either side by means of an adjustable resistance foil. A detector at the input measures the reflected energy; output power is measured by means of a bolometer. Reduction in power is plotted for progressive adjustments of the slider gap and comparison is made with theoretical values.

621.392.43 **1566**

Theoretical Limitations to Impedance Matching.—R. L. Tanner. (*Electronics*, Feb. 1951, Vol. 24, No. 2, pp. 234. .242.) It is shown that many aerials can be represented with adequate accuracy by a simple RLC circuit. The optimum matching of such a circuit is considered in terms of the attainable voltage s.w.r. A worked-out example shows good agreement with the theory.

621.396.67 **1567**

Effect of a Metal Mast and Guy Wires on the Performance of the 600-Ohm Multiple-Wire Delta Antenna.—H. N. Cones. (*Bur. Stand. J. Res.*, Feb. 1951, Vol. 46, No. 2, pp. 113–120.) Describes measurements on scaled-down models used as receiving aerials. Curves show the terminal impedance, radiation patterns, and efficiency with and without guys for full-scale aerials at 1–25 Mc/s. A metal mast causes little change in the vertical radiation pattern (14–25 Mc/s) except for large side lobes at 15 Mc/s. Continuous guys improve the radiation pattern; with wooden masts, the guys have no measurable effect on the input impedance except where half a wavelength long, and the radiation efficiency is unaffected.

621.396.67 : 621.397.6 **1568**

Television Totem Pole.—F. G. Kear & O. B. Hanson. (*Electronics*, Feb. 1951, Vol. 24, No. 2, pp. 66–70.) Existing television stations in New York City have been troubled by shadow areas and ghost signals due to nearby high buildings. This is being overcome by the use of five aerial arrays mounted one above the other on a 222-ft tower on top of the Empire State Building, initially for the use of five stations. Other stations may later share the same aerials, or new u.h.f. aerials may be added. Each array has a power gain of about 4. Mutual interaction is small. The transmitters are located in the upper storeys of the building. See also 1261 of May.

621.396.67.012 : 621.317.3.087.6 **1569**

Polar Diagram Plotter.—(See 1705.)

621.396.677 **1570**

On the Directional Patterns of Polystyrene Rod Antennas.—R. B. Watson. (*J. appl. Phys.*, Feb. 1951, Vol. 22, No. 2, pp. 154–156.) Increase in length from about 4 λ to 10 λ, while maintaining the ratio between the lengths of tapered and untapered parts, gives experimental values of apparent refractive index which are lower than indicated by theory and decrease with increasing length. The directional patterns are consequently less sharp than expected for the longer rods.

621.396.677 : 621.396.11 **1571**

The Theory of Parallel-Plate Media for Microwave Lenses.—E. A. N. Whitehead. (*Proc. Instn elect. Engrs*, Part III, March 1951, Vol. 98, No. 52, pp. 133–140.) The reflection and refraction of a plane e.m. wave at a plane interface formed by the edges of an infinite set of equidistant parallel metal plates of negligible thickness and perfect conductivity are studied. The solution presented extends the scope of those already published and the method is simpler than that previously used. From the formulae derived, curves of the power-transmission and power-reflection coefficients, and of the phase changes across the interface, have been computed. The formulae have also been tentatively applied to certain lenses to derive practical limits to the design of efficient lenses.

621.396.677.029.64 **1572**

Parabolic-Cylinder Aerials.—D. G. Kiely. (*Wireless Engr*, March 1951, Vol. 28, No. 330, pp. 73–78.) The method of design and the technique of construction of open parabolic-cylinder aerials are described. The maximum side-lobe level is 30 db below that of the main beam and represents a considerable improvement in performance over that of the cheese aerial which is commonly used for navigational-radar sets. Comparison is also made with the performance of a more complicated type of 'corrected' parabolic-cylinder aerial which has been investigated by other workers.

621.396.677.5† **1573**

Optimum Dimensions of a Stranded-Wire Loop Aerial for Reception.—A. Colombani. (*C. R. Acad. Sci., Paris*, 19th Feb. 1951, Vol. 232, No. 8, pp. 708–709.) Results of the study of h.f. resistance of a helical stranded-wire coil (see 602 of 1950) are applied. Under the optimum conditions the r.f. resistance is twice the d.c. resistance and is given by an expression independent of the nature of the metal used. The distributed capacitance decreases with the ratio of the volume of coil metal to that of its receptacle; to keep this low the depth of winding may be increased, with corresponding decrease of the length, making the aerial a relatively flat coil of large mean diameter. The signal/noise ratio is better for this form than for the antenna form.

621.396.67 **1574**

Antennas. [Book Review]—J. D. Kraus. Publishers: McGraw-Hill, New York, 1950, 553 pp., $8.00. (*Electronics*, Feb. 1951, Vol. 24, No. 2, p. 136.) "Intended for use as a text and reference for senior or graduate courses in antenna theory. As such, it serves admirably."

CIRCUITS AND CIRCUIT ELEMENTS

001.8 **1575**

The Sense of 'Operational Analysis' and the use of 'Operators' for the 'Operational Diagrams' of 'Operational Analysis'.—W. Boesch. (*Microtecnic, Lausanne*, Nov./Dec. 1950, Vol. 4, No. 6, pp. 333–341.) 'Operational analysis' is a method for studying the operation of measuring circuits, especially telemetering and remote-control circuits. A new form of presentation, 'functional symbolism', is introduced; this is compared favourably with the block-diagram system of presentation, in respect of the amount of information it can convey regarding the functioning of apparatus. Elementary operational symbols are defined, and equivalent operational forms are given for numerous block-diagram symbols. Several complete systems are given in the new notation. The method facilitates estimation of minimum equipment required and recognition of superfluous apparatus included in a system.

621.3.011.2.018.12 **1576**

Impedances with Prescribed Variation of Phase Angle.—E. Baumann. (*Z. angew. Math. Phys.*, 15th Jan. 1950, Vol. 1, No. 1, pp. 43–52.) Presentation of a method of calculating impedances whose phase shift is required to vary with frequency in a particular manner. The method is similar to that used in Cauer's filter theory, and involves the solution of a problem in the division of elliptical functions. Application to negative-feedback amplifiers is indicated.

621.3.015.7† : 621.387.4† **1577**

A Single-Channel Pulse Analyser for Nuclear Experiments.—J. S. Eppstein. (*J. sci. Instrum.*, Feb. 1951, Vol. 28, No. 2, pp. 41–44.) Description, with detailed circuit diagram, of an instrument which accepts all pulses

whose height is between two voltage levels whose mean level is adjustable from 5 to 40 V, while their difference is constant.

621.3.018.4.012.1 **1578**

Frequency-Coordinate Vector Diagram.—P. F. Ordung & H. L. Krauss. (*J. Franklin Inst.*, March 1951, Vol. 251, No. 3, pp. 343–350.) Laplace-transform theory enables the response of a circuit to be expressed as a function of the complex variable $\alpha + j\omega$, where α is the decrement and ω the 'real' angular frequency. Physically, the nature of the real-frequency response is usually not discernible by casual inspection of the mathematical function. A method is developed for visualizing this frequency response by means of a vector diagram constructed from the response function.

621.314.2.029.5 **1579**

Wide-Band High-Frequency Low-Power Transformers with Laminated Cores.—H. Wilde. (*Frequenz*, Dec. 1950, Vol. 4, No. 12, pp. 305–314.) Detailed discussion of the optimum design of wide-band transformers for powers < 1 W. A toroidal core of high-μ metal tape minimizes leakage and winding capacitances. For sharp attenuation at the lower limiting frequency, this should be below the limiting frequency of the eddy currents in the core. For determination of the upper frequency limit, the leakage inductance and winding capacitance must be known. A method for calculating these approximately gives values in agreement with measurements. Winding capacitance, which reduces the upper frequency limit considerably when the transformation ratio is high, may be reduced by winding the primary in sector fashion.

621.314.25 : 621.392.4 **1580**

A Choke-Coupled Phase Invertor of High Accuracy.—R. A. Seymour & D. G. Tucker. (*Electronic Engng*, Feb. 1951, Vol. 23, No. 276, pp. 64–65.) A triode is used with mutually coupled balanced chokes in the anode and cathode, enabling the voltage-handling capacity to be extended, while preserving good voltage balance and phase accuracy. Expressions are derived for gain, phase shift and the distortion due to the flow of grid current.

621.314.3† **1581**

A Theoretical and Experimental Study of the Series-Connected Magnetic Amplifier.—H. M. Gale & P. D. Atkinson. (*Proc. Instn elect. Engrs*, Part I, Jan. 1951, Vol. 98, No. 109, pp. 41–43.) Discussion on 2729 of 1949.

621.314.3† **1582**

Magnetic Amplifiers.—A. G. Milnes. (*Proc. Instn elect. Engrs*, Part I, Jan. 1951, Vol. 98, No. 109, pp. 40–41.) Discussion on 2728 of 1949.

621.316.729 : 517.942.93 **1583**

Concerning Mathieu's Equation.—J. Haag. (*C. R. Acad. Sci., Paris*, 19th Feb. 1951, Vol. 232, No. 8, pp. 661–663.) The stability of the periodic solutions of a Mathieu equation including small perturbation terms is investigated. The problem is a particular, simple case of Haag's general theory of synchronization of linear oscillators.

621.316.86 **1584**

The Quality of Resistors in Printed Circuits.—G. Matthaes. (*Elektrotech. Z.*, 1st March 1950, Vol. 71, No. 5, pp. 105–107.) Printed circuits have been in commercial production in Italy for some time. Resistors manufactured by this process, with silicones as binder, are compared with carbon-layer resistors in respect of load-carrying capacity, variation with humidity, temperature, time and applied voltage, noise, h.f. operation and practical tolerances. The quality of the two types is found to be about the same.

621.318.572.015.7 **1585**

Multiple-Output Predetermined Counter.—D. L. Gerlough & H. R. Kaiser. (*Electronics*, Feb. 1951, Vol. 24, No. 2, pp. 122. .184.) Detailed description of a counter circuit with a counting capacity of 2^n and with m predetermined points during the counting process where output signals can be obtained.

621.319.4 **1586**

Factors Affecting the Life of Impregnated-Paper Capacitors.—H. F. Church. (*Proc. Instn elect. Engrs*, Part III, March 1951, Vol. 98, No. 52, pp. 113–122.) Discussion of various causes of failure in service.

621.392.43.012.3 **1587**

Minimum-Loss Matching Pads.—J. C. Bregar. (*Electronics*, Feb. 1951, Vol. 24, No. 2, p. 118.) An abac simplifies determination of the two resistance values required in an L-type network for matching unequal impedances with minimum loss of power, and also gives directly the amount of loss in decibels.

621.392.5 **1588**

Ladder Networks. An Algebra for their Solution.—W. E. Bruges. (*Electrician*, 2nd & 9th Feb. 1951, Vol. 146, Nos. 3790 & 3791, pp. 381–384 & 475–478.) Although the paper deals mainly with the application of ladder networks to the determination of the impedance of conductors in the rotor slots of induction motors, the method of solution is of general interest. Use is made of two simple mathematical series which can be written down and evaluated from easily constructed tables.

621.392.52 **1589**

The Properties of the Double-T Quadripole between Finite Resistances.—Günther. (*Funk u. Ton*, Dec. 1950, Vol. 4, No. 12, pp. 628–642.) This type of circuit is particularly useful in feedback a.f. amplifiers. Formulae are derived for input resistance as a function of frequency and output load, coupling coefficient, etc. These characteristics are presented as families of curves so that simple calculation is possible.

621.392.54† **1590**

Single-Input Attenuators with Multiple Outputs.—C. W. Ulrich. (*Electronics*, Feb. 1951, Vol. 24, No. 2, pp. 200. .209.) Design data for a network to feed multiple outputs from a single source so that all branches present equal impedances. The insertion loss involved is calculated.

621.395.813 : 621.392.53 **1591**

The Design of Equalizers by Synthesis Technique.—C. F. Campbell. (*Strowger J.*, Nov. 1950, Vol. 7, No. 3, pp. 151–161.) A general discussion of the methods of design of networks with specified insertion-loss/frequency characteristics. A new method of approximating to the required characteristic by use of the ratio of two polynomials with real coefficients is presented.

621.396.6.002.2 : 621.961 **1592**

Mass-Production Component and Circuit Die Stamping.—R. G. Peters. (*TV Engng, N.Y.*, Jan. 1951, Vol. 2, No. 1, pp. 10–11. .25.) Describes and indicates the advantages of die stamping of circuit wiring and various components from a sheet of conducting material which is simultaneously cemented to a sheet of insulating material.

621.396.611.21 : 621.317.3 **1593**

Measurement of the Electrical Behaviour of Piezo-electric Resonators.—Floyd & Corke. (See 1704.)

621.396.611.4 **1594**

Basis of Approximate Calculation of Electromagnetic Oscillations in Cavity Resonators.—H. J. Mähly. (*Helv. phys. Acta*, 10th Dec. 1950, Vol. 23, Nos. 6/7, pp. 864–865. In German.) Brief discussion of variational methods.

621.396.611.4 : 537.525 **1595**

A Cylindrical Cavity Filled with a D.C. Discharge.—G. W. Stuart, Jr, & P. Rosen. (*J. appl. Phys.*, Feb. 1951, Vol. 22, No. 2, p. 236.) Treating the discharge as a lossy dielectric, formulae for the resonance frequency and for the Q of the cavity are derived.

621.396.611.4 : 621.316.726.078.3 : 621.396.615.14 **1596**

A New Centimetre-Wave Discriminator and its Application to a Frequency-Stabilized Oscillator.—K. C. Johnson. (*Proc. Instn elect. Engrs*, Part III, March 1951, Vol. 98, No. 52, pp. 77–80.) The construction of this discriminator is considerably simpler than previous types in that a single resonant cavity and a single coupling loop are used. The discriminator action is obtained by arranging that the loop is self-inductive so that the total impedance across it varies linearly with frequency near the cavity resonance. The performance is free from serious errors due to changes of input power and drift effects in the crystal detector.

The application to the stabilization of a reflex klystron is described, in which errors in frequency are detected by the discriminator and are used to adjust the reflector voltage. Frequency stability to within 1 part in 10^6 for periods up to half an hour has been achieved.

621.396.615 : 512.83 **1597**

Determinantal Solution of Phase-Shift Oscillators.—J. D. Tucker. (*J. Brit. Instn Radio Engrs*, Jan. 1951, Vol. 11, No. 1, pp. 22–24.) The method is demonstrated by application to the calculation of a four-section RC oscillator using a high-slope h.f. pentode.

621.396.615.14.029.66 **1598**

Millimeter Waves.—J. R. Pierce. (*Electronics*, Jan. 1951, Vol. 24, No. 1, pp. 66–69.) From many points of view, incoherent sources of radiation in the millimetre wavelength range, such as spark-excited oscillators or mass radiators, are unsatisfactory. The various types of source at present available are reviewed and the difficulties in the way of producing powerful coherent sources of millimetre waves are pointed out. Some of the best results for the mm range have been obtained with pulsed magnetrons, but their efficiency falls very considerably for wavelengths below about 6 mm. Various possible alternative methods of producing such waves, including the double-stream valve, the multi-resonator klystron, and the 'relativistic Doppler' method, are briefly discussed.

621.396.645 : 621.387.464† **1599**

Distributed Coincidence Circuit.—C. Wiegand. (*Rev. sci. Instrum.*, Dec. 1950, Vol. 21, No. 12, pp. 975–976.) "A coincidence circuit using the traveling-wave principle as applied to distributed amplification is described. The resolving time is about 10^{-8} sec when the device is used in connection with scintillation detectors."

621.396.645.015.7 **1600**

Transmission-Line-Reflection [voltage-] **Doubling Amplifier.**—J. Marshall. (*Rev. sci. Instrum.*, Dec. 1950, Vol. 21, No. 12, pp. 1010–1013.) Description of a pulse amplifier using voltage doubling by reflection at the open end of a section of coaxial transmission line. Cathode followers are used to couple the output of one line to the input of the next. An amplifier using in each stage the four triode units of two Type 6J6 valves in parallel driving 16 ft of 100-Ω line has a theoretical voltage gain of 1·32 per stage. With appropriate grid series compensation the gain can theoretically be made constant up to 100 Mc/s. Experimentally the gain is 1·3 per stage, with a rise time $< 6 \times 10^{-9}$ sec. Below 50 V, distortion is not serious for pulses shorter than twice the transmission time of the line section. Pulses up to 150 V can be handled.

621.396.645.018.424† : 621.396.828.1 **1601**

Wide-Band Amplifier for Central-Antenna Installations.—J. B. Crawley. (*Electronics*, Feb. 1951, Vol. 24, No. 2, pp. 210..214.) A two-stage high-gain wide-band amplifier with cathode-follower output is described for supplying multiple receivers in locations where high noise level prevents satisfactory operation of ordinary receivers with built-in aerials.

621.396.645.35 **1602**

Determination of the Sensitivity Limit of Mains-Driven D.C. Amplifiers.—H. Etzold & H. Jahn. (*Funk u. Ton*, Dec. 1950, Vol. 4, No. 12, pp. 605–618.) Noise sources in a valve amplifier and the effect of fluctuations on the output level in a compensated circuit are discussed. The measured sensitivity limit for a 1 : 1 signal/noise ratio was 30 μV for the Brentano circuit and 28·4 μV for the feedback bridge circuit. These values, referred to previous sensitivity measurements, give equivalent input fluctuations of 3·5 μV and 3·8 μV respectively, the theoretically calculated figure being 1·1 μV.

621.396.645.35.087.6 **1603**

A Frequency-Compensated Direct-Coupled Amplifier for Use with a Four-Channel Pen Recorder.—J. A. Tanner & B. G. V. Harrington. (*J. sci. Instrum.*, Feb. 1951, Vol. 28, No. 2, pp. 33–35.) The amplifier has balanced stages giving a voltage gain of about 500; a phase inverter is used to provide single-ended output. A method of adjusting the individual dynamic response characteristics of several pen units by frequency-compensation networks is described; this results in response characteristics flat to within ± 3% over the range 0–100 c/s.

621.396.822 **1604**

Valve and Circuit Noise. Radio Research Special Report No. 20. [Book Review]—(See 1808.)

GENERAL PHYSICS

519.2 : 621.3.015.2 **1605**

On the First-Passage-Time Probability Problem.—Siegert. (See 1694.)

535.214 **1606**

Radiation Pressure in a Refracting Medium.—R. V. Jones. (*Nature, Lond.*, 17th March 1951, Vol. 167, No. 4246, pp. 439–440.) The radiation pressure of a beam of light incident on a mirror suspended in a liquid is found to be proportional to the refractive index of the liquid.

535.215.5 **1607**

Quenching Action of Long-Wave Radiation in Electrophotoluminescence: Part 1 — Experimental Results.—F. Vigean. (*C. R. Acad. Sci., Paris*, 26th Feb. 1951, Vol. 232, No. 9, pp. 819–820.)

535.215.5 **1608**

Quenching Action of Long-Wave Radiation in Electrophotoluminescence: Part 2 — Tentative Explanation.—F. Vigean & D. Curie. (*C. R. Acad. Sci., Paris*, 5th March 1951, Vol. 232, No. 10, pp. 955–957.)

535.222 + 621.396.11 **1609**

Proposed New Value for the Velocity of Light.—L. Essen. (*Nature, Lond.*, 17th Feb. 1951, Vol. 167, No. 4242, pp. 258–259.) Evidence is accumulating, particularly from r.f. measurements, that the velocity of light may be significantly greater than the value hitherto accepted, which is derived mainly from optical measurements. The value 299 790 km/s is suggested for adoption until measurements of still greater accuracy have been made. See also 1751 of 1950 and 1225 of May.

535.623 : 621.397.5 **1610**

Color Fundamentals for TV Engineers.—D. G. Fink. (*Electronics*, Dec. 1950, Vol. 23, No. 12, pp. 88–93, Jan. & Feb. 1951, Vol. 24, Nos. 1 & 2, pp. 78–83 & 104–109.) Reproduced from the forthcoming second edition of 'Principles of Television Engineering'. An elementary explanation of basic principles, including discussion of additive and subtractive methods of colour matching, the trichromatic system, the RGB colour diagram and its transformation to the XYZ form, colour specification by dominant wavelength, specification of colour distortion in a television system and its relation to brightness distortion, the colour standards in the 'reference receiver', congruence requirements in the primary images, and the colour-transfer process.

536.7 : 621.315.615 **1611**

Thermodynamics of a Fluid Dielectric.—W. B. Smith-White. (*Nature, Lond.*, 10th March 1951, Vol. 167, No. 4245, pp. 401–402.)

537.221 **1612**

The Volta Effect as a Cause of Static Electrification.—W. R. Harper. (*Proc. roy. Soc. A*, 22nd Jan. 1951, Vol. 205, No. 1080, pp. 83–103.) An experimental investigation of the static electrification of metal/metal surfaces indicates that the apparent inconsistency of earlier results was due to ignorance of some of the operative factors. On paying attention to surface topography and allowing for the transfer of electrons by tunnel effect a precise theory of separation charging is derived giving results in agreement with experiments.

537.311.5 + 537.311.62 **1613**

Skin Effect and Current Distribution in Conductors at High Frequencies.—F. Benz. (*Elektrotech. u. Maschinenb.*, Dec. 1950, Vol. 67, No. 12, pp. 366–374.) In conductors with noncircular cross-section or with current-carrying leads in proximity, the effect of the current distribution, as distinct from the skin effect, leads to an increase in resistance, due to the higher current density in the region of greater field strengths at the conductor surface. Practical examples are discussed.

537.315.6 : 517.942.9 **1614**

On Some Dual Integral Equations occurring in Potential Problems with Axial Symmetry.—C. J. Tranter. (*Quart. J. Mech. appl. Math.*, Dec. 1950, Vol. 3, Part 4, pp. 411–419.) Hankel transforms are used to reduce the solution of Laplace's equation under given conditions to the solution of a pair of dual integral equations. A formal solution of these equations is given and, as an example, is applied to find the potential due to a circular disk parallel to and equidistant from two earthed parallel plates.

537.52 **1615**

The Part Played by the Electrodes in the Starting of Electric Discharges in Gases.—F. L. Jones, E. T. de la Perrelle & C. G. Morgan. (*C. R. Acad. Sci., Paris*, 19th Feb. 1951, Vol. 232, No. 8, pp. 716–718.) Measurements were made of the electron emission, for different surface conditions, from cold Ni and W cathodes subjected to a mean field of the order of 10^5 V/cm in air at atmospheric pressure. Oxidation increased the emission. Effects due to residual positive ions were also studied.

537.527 **1616**

The Influence of the Electrodes on the Discharge between Coaxial Cylinders in Compressed Air.—W. Bright. (*C. R. Acad. Sci., Paris*, 19th Feb. 1951, Vol. 232, No. 8, pp. 714–716.) Experiments show that the breakdown voltage depends on the metals of which the two cylinders are composed; it is generally lower when the inner is cathode. The theoretical explanation of the mechanisms involved is under investigation.

538.51 **1617**

Electromagnetic Induction in a Semi-infinite Conductor with a Plane Boundary.—A. T. Price. (*Quart. J. Mech. appl. Math.*, Dec. 1950, Vol. 3, Part 4, pp. 385–410.) The general theory is considered; solutions of the fundamental equations are of two types, corresponding to two distinct modes of decay of currents. Detailed calculations are made of the induced field and currents produced by a periodic and aperiodic line current parallel to the face of the conductor, and the method of calculation for other inducing fields is indicated. Applicability of the theory to geophysical problems is discussed.

538.56 : 535.312 : 537.525.5 **1618**

Radio Reflexions from a Column of Ionized Gas.—D. Romell. (*Nature, Lond.*, 10th Feb. 1951, Vol. 167, No. 4241, p. 243.) The reflection of 30-cm radio waves from a mercury-discharge tube of diameter 3·2 cm was studied. With the electric vector perpendicular to the axis of the column, strong reflections were obtained when resonance occurred at a discharge current of about 0·9 A, compared with a predicted value of 0·8 A. The reflected power was 80% of that reflected from a metal strip of width $\lambda/2$. With the plane of polarization parallel to the column no reflected wave could be detected. See also 96 of January (Denno et al.).

538.56 : 535.42 **1619**

Note on Diffraction by an Edge.—D. S. Jones. (*Quart. J. Mech. appl. Math.*, Dec. 1950, Vol. 3, Part 4, pp. 420–434.) If the electric current and charge on a perfectly conducting sheet are integrable in the neighbourhood of the edge, the line distributions of electric current and charge on the edge are determined by the boundary conditions on the sheet. Assuming that there are no line distributions of magnetic current and charge, the field is then determined uniquely. When the currents near the edge can be expanded in power series, the index of the first term is $(2p + 1)/2$, where p is an integer greater than -2 or -1 according as the current parallel or perpendicular to the edge is considered. The diffraction, in three dimensions, of a plane wave by a semi-infinite plane is also considered.

538.56 : 535.42.001.11 **1620**

A Method for the Exact Solution of a Class of Two-Dimensional Diffraction Problems.—P. C. Clemmow. (*Proc. roy. Soc. A*, 7th Feb. 1951, Vol. 205, No. 1081, pp. 286–308.) Representation of the scattered field as an angular spectrum of plane waves leads directly to a pair of dual integral equations which replace the single integral equation of Schwinger's method. The unknown function in each of these dual integral equations is that which defines the angular spectrum, and when this function is known the scattered field is presented in the form of a definite integral. As far as the radiation field is concerned, this integral is of the type which can be approximately evaluated by the method of steepest descents, though in certain circumstances it is necessary to generalize the usual procedure.

The method is appropriate to two-dimensional problems in which a plane wave, of arbitrary polarization, is incident on plane perfectly conducting structures; for certain configurations the dual integral equations can be solved by the application of Cauchy's residue theorem. The three problems considered are those for which the diffracting plates, situated in free space, are respectively a half-plane, two parallel half-planes, and an infinite set of parallel half-planes, the second case being illustrated by a numerical example. Several points of general interest in diffraction theory are discussed, including the question of the nature of the singularity at a sharp edge, and it is shown that the solution for an arbitrary three-dimensional incident field can be derived from the corresponding solution for a two-dimensional incident plane wave.

538.566 **1621**

On the Propagation of Energy in Linear Conservative Waves.—L. J. F. Broer. (*Appl. sci. Res.*, 1951, Vol. A2, Nos. 5/6, pp. 329–344.) The method of stationary phase is applied to show that whenever this method is applicable the rate of energy propagation in a system of waves without dissipation is equal to the group velocity. The reason why this equality can be established by this kinematical method is examined by discussion of simple harmonic waves. The choice of an expression for the energy density to be used in connection with a given wave equation is shown to be restricted by the conservation of energy in such a way that the ratio of the average rate of work to the average energy density always equals the group velocity. Examples of wave motion are discussed to illustrate the use of the formulae derived.

538.566.001.11 : 523.72 **1622**

The Interpretation of the Magneto-ionic Theory.—K. C. Westfold. (*J. atmos. terr. Phys.*, 1951, Vol. 1, No. 3, pp. 152–186.) Discussion of the implications of the Appleton-Hartree formula when collisions are neglected, and study of particular approximate solutions of the quadratic equation that determines the complex refractive index and the polarization. The four cases considered are those where the collision frequency or the gyrofrequency is small or large compared with the wave frequency. The most fruitful approximation is for the case where the collision frequency is small compared with the wave frequency. The solutions then provide sufficient data for a set of curves to be drawn which present a complete mathematical picture of the associated complex dielectric constant and the polarization. From these curves others are derived showing the effects of different physical conditions on the refractive index and absorption coefficient.

Applications of the magneto-ionic theory to propagation in the solar atmosphere are critically discussed and formulae are given for the intensity of the emergent thermal radiation whose frequency is large compared with the gyrofrequency of the medium.

621.3.011.4 : 513.344 **1623**

Calculation of the Electrical Capacitance of a Cube.—D. K. Reitan & T. J. Higgins. (*J. appl. Phys.*, Feb. 1951, Vol. 22, No. 2, pp. 223–226.) "The basic theory of calculation of the capacitance of a given geometrical configuration by the use of sub-areas is advanced and applied to solve the long-standing problem of the accurate evaluation of the capacitance C of a cube of side a. The best previously published determination is $0{\cdot}62211\,a < C < 0{\cdot}71055\,a$. The value obtained of $C \approx 0{\cdot}655\,a$ e.s.u. is both a lower limit and very close to the exact value."

537.523.3/.4 **1624**

Corona and Breakdown at Frequencies up to 12 Mc/s. Technical Report Reference L/T229. [Book Review]—A. W. Bright. Publishers: The British Electrical and Allied Industries Research Association, London, 1950, 24 pp., 12s. (*Beama J.*, Feb. 1951, Vol. 58, No. 164, p. 57.) Previous work on breakdown in air at frequencies up to about 100 Mc/s is reviewed, experiments on h.f. breakdown between a thin wire and a concentric tube are described, and critical-gap phenomena with 2-cm spheres in air, N_2, O_2, and freon are studied. A simple theory is put forward to explain some of the results.

GEOPHYSICAL AND EXTRATERRESTRIAL PHENOMENA

523.5 : 621.396.9 **1625**

Deceleration and Ionizing Efficiency of Radar Meteors.—D. W. R. McKinley. (*J. appl. Phys.*, Feb. 1951, Vol. 22, No. 2, pp. 202–214.) Improved instrumentation of the radar system permitted more accurate analysis of range/time records of meteor echoes. The meteor deceleration could be determined in special cases, mean decelerations of 0·48, 1·1, and 1·5 km/s per sec being deduced. Velocity data from a c.w. Doppler system were compared with radar data for the meteors observed. Using existing atmospheric-density values and Lovell's scattering formula, the ionizing efficiency is computed to be 10^{-6} for a 60-km/s meteor and 10^{-8} for a 20-km/s meteor. For lower values of air density, efficiency figures are increased and rates of electron production deduced from loss-of-mass considerations agree better with rates calculated from radar data. Further statistical data and information concerning the ionizing properties of 1-keV atoms are required before definite conclusions can be drawn.

523.72 : 538.566.001.11 **1626**

The Interpretation of the Magneto-ionic Theory.—Westfold. (See 1622.)

523.72 + 523.8] : 621.396.822 **1627**

Noise from Extra-Terrestrial Sources.—H. Rakshit. (*Sci. Culture*, Jan. 1951, Vol. 16, No. 7, pp. 293–297.) A brief survey of experimental evidence accumulated and explanatory theories advanced by workers from 1931 onwards.

523.72 : 621.396.822 **1628**

Equivalent Path and Absorption for Electromagnetic Radiation in the Solar Corona.—J. C. Jaeger & K. C. Westfold. (*Aust. J. sci. Res., Ser. A*, Sept. 1950, Vol. 3, No. 3, pp. 376–386.) "Calculations of the trajectories, equivalent path, and absorption of rays, in the frequency range 20–100 Mc/s, in the solar corona have been made, neglecting possible magnetic fields and assuming spherical symmetry. Interpreting the double-humped burst of solar noise as the superposition of a direct and an echo signal, inferences are made as to the height in the corona and location on the solar disk of its source."

523.72 : 621.396.822 **1629**

Observations of the Spectrum of High-Intensity Solar Radiation at Metre Wavelengths: Part 1—The Apparatus and Spectral Types of Solar Burst Observed.—J. P. Wild & L. L. McCready. (*Aust. J. sci. Res., Ser. A*, Sept. 1950, Vol. 3, No. 3, pp. 387–398.) "An apparatus for recording the dynamic spectrum of high-intensity solar radiation (in particular the sudden bursts) in the frequency range 70–130 Mc/s is described. The spectra are displayed on a cathode-ray tube at intervals of about one-third of a second. Solar bursts observed with the apparatus were found to have widely different spectra. However, analysis of a number of bursts indicated the common occurrence of three distinct spectral types. These types are described and illustrated by samples. One type, of narrow bandwidth, was exhibited by short-

lived bursts that occur in large numbers during periods of high intensity ('noise storms'); these bursts are presumed to be circularly polarized and associated with sunspots. A second type, characterized by a slow drift of spectral features towards the lower frequencies, was exhibited by sporadic 'outbursts' associated with solar flares. Other sporadic bursts had diverse spectra, but some of them conformed to a third spectral type in which the frequency of maximum intensity drifts rapidly towards the lower frequencies. The result that outbursts seem to exhibit a distinct type of spectrum is considered to provide a possible means of recognizing these phenomena with certainty."

523.72 : 621.396.822 **1630**

Observations of the Spectrum of High-Intensity Solar Radiation at Metre Wavelengths: Part 2 — Outbursts.—J. P. Wild. (*Aust. J. sci. Res., Ser. A*, Sept. 1950, Vol. 3, No. 3, pp. 399–408.) Observations of the spectrum of outbursts of solar r.f. radiation in the range 70–130 Mc/s are described. In accordance with part 1, an 'outburst' is defined as a burst having a particular type of 'dynamic' spectrum, characterized by a drift of spectral features, with time, towards the lower frequencies at a rate of the order of ¼ Mc/s per second. The observed outbursts have a close connection with solar flares and their geophysical accompaniments. The spectra are tentatively interpreted in terms of the motion of a physical agency in the solar atmosphere. The possible identification of the agency with 'surge' prominences and the corpuscular streams that cause a type of terrestrial magnetic storm is discussed. The evidence is quite consistent with the hypothesis that the agency corresponds to the magnetic-storm particles.

523.746 : 550.385 **1631**

Solar Activity and Geomagnetic Storms, 1950.—H. W. Newton & H. F. Finch. (*Observatory*, Feb. 1951, Vol. 71, No. 860, pp. 45–47.) A brief review of conditions during 1950. Provisional mean daily sunspot numbers for each month, details of the larger sunspot groups (which suggest the existence of favoured regions for spot formation or continuance) and data dealing with the magnetic storms recorded at Abinger, are included. The decline of solar-flare occurrence is noted.

523.752.001.572 **1632**

Ultra-Violet Emission from the Chromosphere.—R. v. d. R. Woolley & C. W. Allen. (*Mon. Not. R. astr. Soc.*, 1950, Vol. 110, No. 4, pp. 358–372.) A model of the quiet chromosphere is described which has been fitted to eclipse data and to observations of solar radio noise and of the ionosphere, all taken at minimum solar disturbance. The model has spherical symmetry and a single value of the kinetic temperature at every height. There is a sharp division at 6 000 km; below this height the temperature is 5 040°K, above it the temperature increases with height, very rapidly at first. The number of quanta emitted by the chromosphere capable of ionizing terrestrial gases is estimated at 7×10^{14} per cm^2 per sec. About half have an energy $>13{\cdot}6$ V, and are therefore capable of ionizing O to O+ in the ionosphere. The energy is supplied by conduction inwards from the corona.

523.78 **1633**

Alaskan Eclipse Expedition.—(*Tech. Bull. nat. Bur. Stand.*, Feb. 1951, Vol. 35, No. 2, pp. 17–19.) Modern radio-astronomy methods were applied in this expedition to observe the total eclipse of the sun by the moon on 11th September 1950. A mirror of diameter 10 ft and focal length 3 ft was used to collect the solar r.f. energy. Automatic records were made of intensity/time for wavelengths of 3, 10 and 65 cm, starting about 2 hours before the eclipse. Delay of the recorded minimum with respect to time of total optical eclipse is attributed to sunspot asymmetry of the corona. The cause of unexpected increase of intensity at first and fourth contact is under investigation.

523.854 : 551.510.535 : 621.396.822 **1634**

The Effects of the Terrestrial Ionosphere on the Radio Waves from Discrete Sources in the Galaxy.—M. Ryle & A. Hewish. (*Mon. Not. R. astr. Soc.*, 1950, Vol. 110, No. 4, pp. 381–394.) "Observations of the discrete sources of radio waves in the galaxy have shown the existence of irregular refraction processes in the terrestrial ionosphere. These irregularities cause rapid fluctuations in the intensity of the radiation at the ground, whilst observations with aerials of high resolving power have shown, in addition, that the apparent position of a source may vary irregularly by 2–3 minutes of arc. The incidence of these irregularities shows a marked diurnal variation having a maximum at about $01^h\ 00^m$ local time.

It does not seem possible to account for the irregularities in the ionosphere in terms of solar emissions, and an alternative mechanism is proposed which is based on the interception of interstellar matter moving under the gravitational attraction of the sun. If this hypothesis is correct, further experiments may provide information of interest in theories of the accretion of matter by the sun."

537.591 : 523.752 **1635**

The Change of Cosmic-Ray Neutron Intensity following Solar Disturbances.—J. A. Simpson, Jr. (*Phys. Rev.*, 15th Feb. 1951, Vol. 81, No. 4, pp. 639–640.)

537.591 : 621.396.812.3 **1636**

The Cosmic-Ray Intensity and Radio Fade-Outs.—Dolbear, Elliot & Dawton. (See 1763.)

538.12 : 521.15 **1637**

Gravitation and Magnetism.—E. A. Milne. (*Mon. Not. R. astr. Soc.*, 1950, Vol. 110, No. 4, pp. 266–274.) "It is shown by the methods of kinematic relativity that there should be a connection between gravitation and magnetism of the type suggested by the empirical formulae of Blackett and Wilson, multiplied however by certain dimensionless ratios."

550.38 **1638**

The Terrestrial Magnetic Field.—H. Manley. (*Research, Lond.*, Jan. 1951, Vol. 4, No. 1, pp. 43–44.) Results of research on the thermomagnetic properties of rocks are reported briefly and discussed. They support the theory that the earth's magnetic field has remained substantially constant throughout geological time. The reverse magnetization of intrusions is usually attributed to the action of a local secondary field in the remote past, possibly due to a Bullard/Elsasser core vortex.

550.385 + 551.594.5 **1639**

Notes on Aurorae and Magnetic Storms.—S. Chapman. (*J. atmos. terr. Phys.*, 1951, Vol. 1, No. 3, pp. 189–199.) Suggestions for a laboratory experiment to throw light on the production of aurorae and magnetic storms.

551.510.4 : 546.214 **1640**

Vertical Distribution of Atmospheric Ozone.—V. H. Regener. (*Nature, Lond.*, 17th Feb. 1951, Vol. 167, No. 4242, pp. 276–277.) Results obtained from free-balloon flights to heights of 30–32 km are reported and discussed.

551.510.5 : 621.396.11 : 532.517.4 **1641**

Spectrum of Atmospheric Turbulence.—L. F. Richardson: E. C. S. Megaw. (*Nature, Lond.*, 24th Feb. 1951, Vol. 167, No. 4243, p. 318.) Comment on 973 of April (Megaw) and author's reply.

551.510.53 : 001.4 **1642**

Upper Atmospheric Nomenclature.—S. Chapman. (*J. atmos. terr. Phys.*, 1951, Vol. 1, No. 3, p. 201.) Addendum to 876 of April.

551.510.53 : 001.4 **1643**

Nomenclature of the Upper Atmosphere.—N. C. Gerson & J. Kaplan. (*J. atmos. terr. Phys.*, 1951, Vol. 1, No. 3, p. 200.) Comment on 876 of April (Chapman).

551.510.535 **1644**

Effects of the Atmospheric Scale-Height Gradient on the Variation of Ionization and Short-Wave Absorption.—M. Nicolet. (*J. atmos. terr. Phys.*, 1951, Vol. 1, No. 3, pp. 141–146.) A discussion of layer formation processes in an atmosphere in which the scale height varies linearly with height, the electron recombination coefficient also varying with height. The rate of variation of the critical frequency and of the total h.f. absorption of the layer with the solar zenith angle are tabulated. The experimental data available may be explained on the basis of some of the atmospheric models considered.

551.510.535 **1645**

Thermal Splitting of Ionosphere Layers.—In 879 of April the journal reference should read "*Arch. Met. Geoph. Bioklimatol. A*".

551.510.535 : 535.361.2 : 621.396.81 **1646**

The Scattering of Radio Waves.—Dieminger. (See 1762.)

551.510.535 : 550.385 **1647**

Investigation of the World-Wide Ionospheric Disturbance of 15th March 1948.—In 889 of April the journal reference should read "*Arch. Met. Geoph. Bioklimatol. A*".

551.578.1 : 621.396.9 **1648**

Radar Observations of Rain and their Relation to Mechanisms of Rain Formation.—E. G. Bowen. (*J. atmos. terr. Phys.*, 1951, Vol. 1, No. 3, pp. 125–140.) The two types of radar echoes from rain, one showing the 'bright band', the other of the columnar type, were investigated, using both ground and airborne radar. The results suggest that two distinct types of rain formation are concerned.

551.594.5 : 551.510.535 **1649**

Reflexion of High Frequencies during Auroral Activity.—D. Davidson. (*Nature, Lond.*, 17th Feb. 1951, Vol. 167, No. 4242, pp. 277–278.) Observations have been made at Concord, Mass., of auroral echoes at frequencies of 17·3 and 3·5 Mc/s. Echoes corresponding to long slant ranges are obtained, indicating that the centres of reflection are at a considerable horizontal distance rather than at great heights.

551.594.51 : 537.13 **1650**

Protons and the Aurora.—C. W. Gartlein. (*Phys. Rev.*, 1st Feb. 1951, Vol. 81, No. 3, pp. 463–464.) Spectrograms of an auroral arc over Arnprior, Ontario, obtained simultaneously on 30th Sept. 1950 at Arnprior and at Ithaca, New York, 330 km apart, indicate that hydrogen, in the form of protons, was approaching the earth with a mean velocity of 675 km/s and a maximum velocity of 1 350 km/s. See also 636 of March (Meinel).

551.594.6 **1651**

The Statistical Action of Atmospherics on a Receiver Tuned to 27 kc/s.—F. Carbenay. (*C. R. Acad. Sci., Paris*, 5th March 1951, Vol. 232, No. 10, pp. 949–950.) The rhythm of succession of atmospherics capable of actuating a recorder tuned to 27 kc/s appears to be independent of the bandwidth of the recorder, provided the threshold level is defined by a pulse of duration small compared with the period of the receiver (37 μs). See also 2282 of 1950 and back references.

551.594.6 : 621.396.11 **1652**

The Propagation of a Radio-Atmospheric.—K. G. Budden. (*Phil. Mag.*, Jan. 1951, Vol. 42, No. 324, pp. 1–19.) The propagation of an atmospheric may be considered theoretically in terms of multiply reflected rays or in terms of the permitted modes in the waveguide formed by the earth and the ionosphere. Using the latter method, the assumption of perfectly conducting boundaries results in the 'zero-order' mode being unattenuated at all frequencies, in disagreement with observation. By considering the ionosphere as a homogeneous medium of complex refractive index, the mode propagation is modified in such a way that the zero-order mode undergoes marked attenuation at frequencies below about 8 kc/s. General agreement between the theoretical and observed curves of attenuation versus frequency at a distance of 1 000 km is obtained at all frequencies below 16 kc/s, using only two modes. The frequency below which attenuation increases rapidly depends markedly on the height of the ionosphere, and the attenuation is found to change diurnally and during sudden ionospheric disturbances in agreement with observed height changes.

The deduced waveform at 1 000 km is oscillatory, with decreasing frequency and amplitude, corresponding to types often observed in practice. The equivalence of the ray and mode pictures is demonstrated for the case of a large ionospheric reflection coefficient. Possible extensions of the theory are suggested to deal with various ion-density distributions and to include the effect of the earth's magnetic field.

LOCATION AND AIDS TO NAVIGATION

621.396.9 **1653**

Visibility of Radar Echoes.—A. W. Ross. (*Wireless Engr*, March 1951, Vol. 28, No. 330, pp. 79–92.) A method is described for calculating the ratio of signal power to noise power required for any given probability of detection, particularly when the number of signal pulses producing the echo paint is small. The approximations used to obtain a simple solution are unlikely to introduce serious errors, though the 'criteria of recognition' employed to express the behaviour of an operator in mathematical terms are open to discussion. Numerical solutions are included which cover a fairly wide range of conditions, and these are used to examine the influence of various factors on the detectability of a weak signal. Biasing and limiting are also considered.

621.396.9 : 523.5 **1654**

Deceleration and Ionizing Efficiency of Radar Meteors.—McKinley. (See 1625.)

621.396.9 : 526.9 **1655**

Datum Stabilizer for Radar-Altimeter Surveying.—B. I. McCaffrey. (*Electronics*, Feb. 1951, Vol. 24, No. 2, pp. 100–103.) To correct for altitude fluctuations when using an airborne profile recorder, an electronic circuit operating from an aneroid element senses deviations of the aircraft from level flight and automatically applies corrections to the radar record of terrain elevation.

621.396.9 : 551.578.1 **1656**

Radar Observations of Rain and their Relation to Mechanisms of Rain Formation.—Bowen. (See 1648.)

621.396.9 : 551.594.22 **1657**

A Radar Echo from Lightning.—I. C. Browne. (*Nature, Lond.*, 17th March 1951, Vol. 167, No. 4246, p. 438.) An

echo on λ 3·2 cm of duration 2 ms was observed during a thunderstorm. If it was due to reflection from a column of electrons, the concentration must have exceeded 5×10^{13} electrons/cm length.

621.396.933 **1658**

Automatic G.C.A.—J. T. McNaney. (*Electronics*, Feb. 1951, Vol. 24, No. 2, pp. 82–87.) Using conventional precision approach radar, a fully automatic system capable of controlling the approaches of five aircraft simultaneously can be developed. A full analysis of the system is given, describing the scanning systems, target selection by virtue of range and speed, and presentation of elevation, azimuth and range indications as visual displays or as control signals to an automatic pilot.

621.396.933 **1659**

Distance-Measuring Equipment for Civil Aircraft. Airborne Apparatus and Ground Beacons.—D. G. Lindsay, J. P. Blom & J. D. Gilchrist. (*A.W.A. tech. Rev.*, Jan. 1951, Vol. 9, No. 1, pp. 1–41.) Substance of a lecture at the Radio Engineering Convention, Melbourne, May 1950. The main features of the system are outlined and its operation is explained. The receiver, video and monitor sections of the ground beacon are described, with details of the arrangement and performance of the various units and description of the modulator and transmitter, and also of the aerial system. An account is included of test instruments developed for periodic checks of the equipment. See also 645 of 1950 (Busignies).

MATERIALS AND SUBSIDIARY TECHNIQUES

531.788.7 **1660**

The Physical Basis of the Residual-Vacuum Characteristic of a Thermionic Valve.—G. H. Metson. (*Brit. J. appl. Phys.*, Feb. 1951, Vol. 2, No. 2, pp. 46–48.) The residual reverse grid current in a hard valve is found to be due to the effects of soft X-rays, which give rise to low-energy photoelectric emission and positive ions. An electrode system is described which enables the photoelectric emission to be suppressed. Using the principles described, the minimum pressure measurable by an ionization gauge has been reduced from 10^{-6} mm to 10^{-9} mm Hg.

533.56 **1661**

The Design of Molecular Pumps.—R. B. Jacobs. (*J. appl. Phys.*, Feb. 1951, Vol. 22, No. 2, pp. 217–220.) A theoretical treatment of the operation characteristics of molecular drag-type pumps. The treatment is based on kinetic theory and is limited to high-vacuum operation. The formulae derived are simple and may be applied readily to practical pump design.

535.215.1 : [546.32 + 546.33 **1662**

New Aspects of the Photoelectric Emission from Na and K.—J. Dickey. (*Phys. Rev.*, 15th Feb. 1951, Vol. 81, No. 4, pp. 612–616.) "The external photoelectric effect for Na and K in the form of thick evaporated layers was investigated with photon energies $h\nu$ up to 6·71 eV. When $h\nu$ was within 1·5 eV of the threshold, the energy distributions of the emitted electrons were like those derived by DuBridge for a simple photoelectric effect involving an ideal metal. For larger $h\nu$, there was a growing preponderance of low-velocity electrons."

535.215.1 : 546.431-3 **1663**

The Enhanced Photoelectric Emission Effect in Barium Oxide.—B. D. McNary. (*Phys. Rev.*, 15th Feb. 1951, Vol. 81, No. 4, pp. 631–632.) The spectral distribution of the photoemission from BaO, before and after irradiation at a wavelength of 3 700 Å, is shown graphically. Curves showing the decay of enhanced photoemission at 300°K at various wavelengths indicate that wavelengths near the threshold, for which the enhancement effect is most pronounced, have the greater decay rate. See also 365 of February (Dickey & Taft).

535.37 : 546.472.21 **1664**

Photoluminescence Efficiency of ZnS-Cu Phosphors as a Function of Temperature.—R. H. Bube. (*Phys. Rev.*, 15th Feb. 1951, Vol. 81, No. 4, pp. 633–634.) Additional results are given for the variation of the efficiency with temperature during excitation by ultraviolet light of wavelength 3 650 Å. See also 648 and 649 of March.

537.311.33 **1665**

Electronic Conduction in Non-metals.—G. Busch. (*Z. angew. Math. Phys.*, 15th Jan. & 15th March 1950, Vol. 1, Nos. 1 & 2, pp. 3–31 & 81–110.) A comprehensive review of the subject from both the theoretical and experimental viewpoint, including recent researches. 131 references are given.

537.311.33 **1666**

Solid State Electronics.—(*Tech. Bull. nat. Bur. Stand.*, Feb. 1951, Vol. 35, No. 2, pp. 22–27.) General account of research on semiconductors in progress at the National Bureau of Standards. Measurements of Hall coefficient and conductivity of *p*-type germanium as functions of temperature are plotted down to low values of temperature. Work on TiO_2 and 'grey tin' is mentioned.

537.311.33 : 541.183.26 **1667**

Adsorption on Semiconductors.—P. Aigrain, C. Dugas & J. Germain. (*C. R. Acad. Sci., Paris*, 12th March 1951, Vol. 232, No. 11, pp. 1100–1101.) The adsorption of certain gases on certain semiconductors can be explained by purely electrostatic phenomena. The calculated adsorption energies and the number of adsorbable atoms are in good agreement with experimental results.

537.311.33 : 546.289 **1668**

Measurement of Hole Diffusion in *n*-Type Germanium.—F. S. Goucher. (*Phys. Rev.*, 1st Feb. 1951, Vol. 81, No. 3, p. 475.) Measurements were made of the voltage picked up by a probe located at a point along a Ge rod when a spot of light was focused on to the rod at various distances from the probe. From the results the lifetime of holes is calculated to be 18 μs, a value in agreement with other determinations.

537.311.33 : 621.315.592† **1669**

Theory and Experiment for a Germanium *p-n* Junction.—F. S. Goucher, G. L. Pearson, M. Sparks, G. K. Teal & W. Shockley. (*Phys. Rev.*, 15th Feb. 1951, Vol. 81, No. 4, pp. 637–638.) The junctions investigated were produced in *n*-type Ge by the addition of Ga so that one portion of the single crystal was *p*-type. Germanium *p-n* junctions closely obey the theoretical rectification law $I = I_s [\exp (eV/kT) - 1]$. Measurements of photoresponse as a function of the distance of the illuminated point from the junction yield values for the lifetimes of injected electrons and holes. Confirmatory values are obtained by measurements of the junction admittance as a function of frequency. See also 1682 below (Teal et al.).

537.533 : [546.78.26 + 546.77.26 **1670**

Electron-Emission Measurements on Carburized Tungsten and Molybdenum.—E. Baş-Taymaz. (*Z. angew. Math. Phys.*, 15th Jan. 1951, Vol. 2, No. 1, pp. 49–51.) The results of measurements at temperatures up to

about 2 300°K are shown graphically. Richardson's law is followed, though in the case of Mo a sudden increase of emission to a value over ten times greater occurred at 1 810° K, with a corresponding sudden decrease at 1 940° K. With falling temperature the increase at 1 810° K was maintained to 1 720° K. Corresponding resistivity changes were noted. These jumps are probably related to phase changes of the crystal structure.

538.221 **1671**

Isothermal Remanent Magnetization of Finely Granulated Magnetite.—J. Roquet. (*C. R. Acad. Sci., Paris*, 5th March 1951, Vol. 232, No. 10, pp. 946–948.)

538.221 **1672**

Precipitation and the Domain Structure of Alnico 5.—A. H. Geisler. (*Phys. Rev.*, 1st Feb. 1951, Vol. 81, No. 3, pp. 478–479.)

•538.221 **1673**

Magnetic Properties of Mixed Ferrites of Magnesium and Zinc.—C. Guillaud. (*C. R. Acad. Sci., Paris*, 5th March 1951, Vol. 232, No. 10, pp. 944–946.) Results for ferrites with graded proportions of MgO and ZnO are shown graphically and illustrate the effect of heat treatment on the magnetic properties and on the Curie temperature.

538.221 **1674**

Ferromagnetic Resonance in Various Ferrites.—W. A. Yager, F. R. Merritt & C. Guillaud. (*Phys. Rev.*, 1st Feb. 1951, Vol. 81, No. 3, pp. 477–478.) Presentation and discussion of results of experiments on spherical polycrystalline specimens of ferrites of Mg, Ni, Co, Mn and Mn-Zn. An operating frequency of 24·164 kMc/s was used.

538.221 : 539.23 **1675**

Thin Ferromagnetic Films.—M. J. Klein & R. S. Smith. (*Phys. Rev.*, 1st Feb. 1951, Vol. 81, No. 3, pp. 378–380.) The dependence of the spontaneous magnetization of these films on temperature and thickness is studied by means of the Bloch spin-wave theory. Summary noted in 2486 of 1950.

538.221 : 548.2 : 539.374 **1676**

The Effects of Plastic Deformation on Magnetic Properties of Polycrystalline Metals.—U. M. Martius. (*Canad. J. Phys.*, Jan. 1951, Vol. 29, No. 1, pp. 21–31.)

538.221 : 621.318.323.2 : 621.396.662.22.029.62 **1677**

Cores for U.S.W. Variometers.—M. Kornetzki & J. Brackmann. (*Frequenz*, Dec. 1950, Vol. 4, No. 12, pp. 318–320.) Measurements on variometer coils with cores of different ferrite materials are reported and the results shown graphically.

538.632 : 546.48-31 **1678**

Hall Constant of Cadmium Oxide.—C. A. Hogarth. (*Nature, Lond.*, 31st March 1951, Vol. 167, No. 4248, pp. 521–522.) An account of measurements made on compressed-powder specimens, of dimensions 4 cm × 1 cm × 0·1 cm and apparent density 5·5 gm/cm³. The results indicate that conduction is by electrons. The influence of temperature and oxygen pressure was investigated.

541.183.26 **1679**

Gases and Metals.—H. Lepp. (*Le Vide*, May & July/Sept. 1948, Vol. 3, Nos. 15 & 16/17, pp. 433–441 & 463–468.) The phenomena of adsorption and absorption of gases by metals are discussed from the physicochemical viewpoint. The usefulness of the method of thermodynamic analysis for investigating metal/gas systems is examined, with particular reference to problems encountered in vacuum technique.

546.281.26 : [537.323 + 536.41 + 537.311.32 **1680**

Physical Properties of Carborundum below 1 000 °C.—A. Schulze. (*Elektrotechnik, Berlin*, Sept. 1950, Vol. 4, No. 9, pp. 326–328.) Results of measurements of (*a*) thermoelectric force of SiC/cekas (a high-resistivity Ni-Cr-Fe alloy) and SiC/Pt couples, (*b*) linear expansion coefficient, (*c*) electrical resistivity, are shown graphically for temperatures from room temperature up to 1 000° C. Anomalies are found in all cases around 560° C and are probably related to the occurrence of an allotropic modification near this temperature.

546.289 **1681**

Germanium.—Recorder II. (*Metal Ind., Lond.*, 23rd Feb. 1951, Vol. 78, No. 8, pp. 151, 153.) A short general account of the properties of Ge. Until recently this material was obtained mainly from sludges produced during the purification of the electrolytes used in the manufacture of electrolytic zinc in the U.S.A., but during the past few years methods have been developed for recovering Ge from the flue-dusts of certain British gasworks. The effect of the method of preparation on the electrical properties is discussed, and current theories of the dependence of I/V characteristics on the distribution of impurities are questioned.

546.289 : 548.55 **1682**

Growth of Germanium Single Crystals containing *p-n* Junctions.—G. K. Teal, M. Sparks & E. Buehler. (*Phys. Rev.*, 15th Feb. 1951, Vol. 81, No. 4, p. 637.) A note describing methods of producing Ge single crystals by progressive pulling from the melt. One type thus produced is a crystal in which the magnitude and type of conductivity in the direction of crystal growth is controlled by addition of an impurity such as Ga (acceptor) or Sb (donor) to the melt from which the crystal is being grown. In this way *p-n* junctions have been formed in Ge single crystals which are exceptional in their agreement with theory and in their electrical properties. See also 1669 above (Goucher et al.).

548.0 : 537.228.1 : 539.32 **1683**

Elasticity of Piezoelectric and Ferroelectric Crystals.—F. Jona. (*Helv. phys. Acta*, 10th Dec. 1950, Vol. 23, Nos. 6/7, pp. 795–844. In German, with English summary.) The diffraction of a beam of monochromatic light by a crystal subjected to ultrasonic excitation was used to determine the elastic behaviour of various crystals. The elastic constants for Rochelle salt and $NaClO_3$ measured between −50° and +30 °C are in agreement with previous results. A theoretical argument shows that the values obtained for ferroelectric crystals by this method refer to constant electric field, and a marked anomaly for KH_2PO_4 at the Curie point is confirmed. Differences in intensity of the observed diffraction patterns are discussed.

621.3.042.2 : 538.144 **1684**

H. F. Magnetization of Ferromagnetic Laminae.—O. I. Butler & H. R. Chablani. (*Wireless Engr*, March 1951, Vol. 28, No. 330, pp. 92–97.) "An attempt is made to improve the accuracy and consistency of calculations based on the classical theory of a.c. magnetization of ferromagnetic laminae by the simple, but logical, expedient of using a value of permeability which differs from the ratio of the peak values of B and H. The chosen value of permeability is, to some extent, dependent upon the shape of the B/H curve, which justifies its use in the case of high-frequency magnetization of the laminae.

It is found that calculated results of the power loss and apparent permeability of silicon-steel samples give fairly close agreement with experiment. A similar accuracy is obtained by a more rigorous and laborious solution which

replaces the B/H curve by a Legendre polynomial series. It appears that there is a definite limitation in the accuracy of calculations based on the d.c. characteristics of the material and the inherent supposition that the material is homogeneous."

621.314.632 : 546.289 : 537.533.9 **1685**

Electron-Bombardment-Induced Conductivity in Germanium Point-Contact Rectifiers.—A. R. Moore & F. Herman. (*Phys. Rev.*, 1st Feb. 1951, Vol. 81, No. 3, pp. 472–473.) A report of preliminary experiments. The surface of the Ge is scanned as in television, using an electron-beam voltage of several kilovolts, and the signal generated in the circuit of the point contact is used to provide modulation in a kinescope or oscilloscope indicating tube. Displays obtained are shown and discussed. The records provide evidence regarding the charge-carrying processes in Ge.

621.314.634 **1686**

Origin of a Time-Lag Effect in Selenium Rectifiers.—K. Lehovec. (*Nature, Lond.*, 31st March 1951, Vol. 167, No. 4248, pp. 522–523.) To decide whether resistance drift after application of voltage is caused by ionic migration or by trapping and thermal release of electrons, a Se rectifier with a transparent Cd electrode was prepared and the influence of light on the effect was studied. It is concluded that the recovery after pulsing with a small voltage in the blocking direction is an electronic process.

621.315.613.1 : 538.214 **1687**

Magnetic Susceptibility and Anisotropy of Mica.—J. T. Kendall & D. Yeo. (*Proc. phys. Soc.*, 1st Feb. 1951, Vol. 64, No. 374B, pp. 135–142.) Measurements on natural muscovite and synthetic fluorphlogopite show that the mean susceptibility varies approximately linearly with the total iron content, and that the paramagnetic anisotropy is proportional to the ferrous-iron content. At low field strengths, ferromagnetic impurities cause anomalous results. These impurities account for the apparent paramagnetism of synthetic mica.

621.315.616.96 : 621.317.333.6 **1688**

The Deterioration and Breakdown of Dielectrics Resulting from Internal Discharges.—J. H. Mason. (*Proc. Instn elect. Engrs*, Part I, Jan. 1951, Vol. 98, No. 109, pp. 44–59.) The deterioration of polythene and other materials when subjected to internal discharges was investigated under controlled conditions. The discharge-inception voltage in voids of different dimensions was determined and the progressive physical deterioration under the action of repeated discharges was observed; typical results are reproduced in tables and photographs. Under equivalent conditions, polytetrafluoroethylene and perspex are less resistant to discharges than polythene.

621.396.822 : 539.23 : 621.315.616.9 **1689**

Random Noise in Dielectric Materials.—J. H. Mason. (*J. appl. Phys.*, Feb. 1951, Vol. 22, No. 2, pp. 235–236.) Electrophotographs show that individual discharges between dielectric surfaces involve only a small area, although continued application of stress may affect many separate areas until the whole area is discharged. The variation in magnitude of the noise observed with different dielectrics and varying humidity is explained by variation in surface and volume conductivity, which control the area which discharges as a single unit and the time constant of charge leakage.

621.775.7 **1690**

Metallkeramik. [Book Review]—F. Skaupy. Publishers: Verlag Chemie, Weinheim/Bergstr., Germany, 4th edn 1950, 267 pp., 19 DM. (*Metal Ind., Lond.*, 23rd Feb. 1951, Vol. 78, No. 8, p. 149.) A completely revised and enlarged edition of the first book to be published on powder metallurgy. "It is a most excellent review of the subject."

MATHEMATICS

517.514 **1691**

Notes on Laplacian Stationary Aleatory Functions.—A. Blanc-Lapierre. (*C. R. Acad. Sci., Paris*, 5th March 1951, Vol. 232, No. 10, pp. 934–936.) Properties of these functions are enumerated and a theorem relating to elliptically polarized light is deduced.

517.514 : 517.942.9 **1692**

Harmonic Analysis of Laplacian Stationary Aleatory Functions.—A. Blanc-Lapierre. (*C. R. Acad. Sci., Paris*, 12th March 1951, Vol. 232, No. 11, pp. 1070–1072.) The properties of a monochromatic or quasimonochromatic component of a Laplacian stationary aleatory function are defined, using Poincaré's representation. The method is useful for describing the statistical properties of radiation of arbitrary polarization.

517.93 **1693**

A Differential Equation occurring in Physics.—N. Minorsky. (*C. R. Acad. Sci., Paris*, 12th March 1951, Vol. 232, No. 11, pp. 1060–1062.) Stable periodic solutions are sought for the equation $\ddot{x} + b\dot{x} + x + (a-\epsilon x^2)\, x \cos 2t + \epsilon x^3 = 0$, using the calculus of perturbations. The general case and 14 particular cases are dealt with.

519.2 : 621.3.015.2 **1694**

On the First-Passage-Time Probability Problem.—A. J. F. Siegert. (*Phys. Rev.*, 15th Feb. 1951, Vol. 81, No. 4, pp. 617–623.) An exact solution is derived for the first-passage-time probability of a stationary one-dimensional Markoffian random function from an integral equation. A recursion formula for the moments is given for the case where the conditional probability density describing the random function satisfies a Fokker-Planck equation. Various known solutions for special applications (noise, Brownian motion) are special cases of the general solution. The Wiener-Rice series for the recurrence-time probability density is derived from a generalization of Schrödinger's integral equation, for the case of a two-dimensional Markoffian random function. See also 1127 of May (Stumpers).

681.142 **1695**

A Process for the Step-by-Step Integration of Differential Equations in an Automatic Digital Computing Machine.—S. Gill. (*Proc. Camb. phil. Soc.*, Jan. 1951, Vol. 47, Part 1, pp. 96–108.) "It is advantageous in automatic computers to employ methods of integration which do not require preceding function values to be known. From a general theory given by Kutta, one such process is chosen giving fourth-order accuracy and requiring the minimum number of storage registers. It is developed into a form which gives the highest attainable accuracy and can be carried out by comparatively few instructions. The errors are studied and a simple example is given."

681.142 **1696**

A Simple Analogue Computor for Fourier Analysis and Synthesis.—J. H. Bowen & T. E. Burnup. (*Electronic Engng*, Feb. 1951, Vol. 23, No. 276, pp. 67–69.) The computer was designed to solve integrals encountered in the study of the responses of electromechanical systems to applied impulses. It is simpler, though less

described computers, and
ents that are commercially

1697
Additive or Subtractive Operation
A. Peuteman. (*C. R. Acad. Sci.*,
51, Vol. 232, No. 11, pp. 1082–

1698
ines and Human Thought.—D. M.
Lond., 17th March 1951, Vol. 167,
434.) A short report on a colloquium
ne main sections were: the design of
: application to mathematics, and
ies between the functions of computing elements and those of the brain.

681.142 : 512.831 **1699**

An Improved Electrical Network for Determining the Eigenvalues and Eigenvectors of a Real Symmetric Matrix.—A. Many. (*Rev. sci. Instrum.*, Dec. 1950, Vol. 21, No. 12, pp. 972–974.) Description of an enlarged and improved form of the computer previously described [131 of 1949 (Many & Meiboom)]. The time required for solution has been shortened and the accuracy made ten times greater. A matrix of the tenth order can be solved in four hours.

517.43 **1700**

Operational Calculus — based on the Two-Sided Laplace Integral. [Book Review]—B. van der Pol & H. Bremmer. Publishers: Cambridge University Press, London, 415 pp., 55s. (*Brit. J. appl. Phys.*, Feb. 1951, Vol. 2, No. 2, pp. 57–58.) "Mainly concerned with [the two-sided Laplace and the Fourier] integrals . . . This book is likely to become and should become a classic. There is no doubt that those interested in applying mathematics will find it of the greatest value and interest."

517.51(083.5) **1701**

Tables of the Function sin φ/φ and of its First Eleven Derivatives. [Book Review]—Staff of the Computation Laboratory, Harvard University. Publishers: Harvard University Press, Cambridge, Mass., & Oxford University Press, London, 1949, 241 pp., 63s. (*Nature, Lond.*, 10th March 1951, Vol. 167, No. 4245, p. 375.)

MEASUREMENTS AND TEST GEAR

621.314.58.001.4 **1702**

Test Procedures for Checking Performance of Vibrator Power Supplies.—M. S. Roth. (*FM-TV*, Jan. 1951, Vol. 11, No. 1, pp. 24–25.) Various possible causes of faulty operation or failure of vibrator units are discussed and oscilloscope tests for voltage and current waveforms are described. Short vibrator life is generally due to faults external to the vibrator itself, so that the checking of the components in the associated circuit is of primary importance in the case of vibrator failure.

621.317.029.5/.6 **1703**

Second Conference on High-Frequency Measurements.—(*Tech. Bull. nat. Bur. Stand.*, March 1951, Vol. 35, No. 3, pp. 39–43.) New developments from laboratories throughout the U.S.A. were reported at the conference held in Washington in January 1951. Brief notes are given of the subject matter of the papers presented, which were grouped under the headings: frequency and time; impedance; power and attenuation; transmission and reception.

621.317.3 : 621.396.611.21 **1704**

Measurement of the Electrical Behaviour of Piezoelectric Resonators.—C. F. Floyd & R. L. Corke. (*Proc. Instn elect. Engrs*, Part III, March 1951, Vol. 98, No. 52, pp. 123–132.) The equivalent circuit of a crystal resonator is determined from measurements of (*a*) the series- and parallel-resonance frequencies, (*b*) the insertion loss as a series element in a suitable low-impedance transmission test-set, (*c*) the capacitance at 1 kc/s. A new type of holder is used in which specimens can be accurately clamped at any desired point on their major surfaces. The results of measurements obtained on various types of quartz, ADP and EDT resonators are tabulated and the effects of off-node mounting are illustrated.

621.317.3.087.6 : 621.396.67.012 **1705**

Polar Diagram Plotter.—(*Wireless World*, Feb. 1951, Vol. 57, No. 2, p. S4.) The polar diagram of a scaled-down (1 : 10) model of an aerial array is obtained in about 15 seconds. The transmitter, operating on a 10-times higher frequency, is fixed while the receiving-aerial array is rotated about its mast at the same angular velocity as that of a circular chart about its centre. Simultaneously, the pen of a recorder is deflected radially across the chart, the amount of deflection being controlled by the rectified aerial voltage.

621.317.333.6 : 621.315.616.96 **1706**

The Deterioration and Breakdown of Dielectrics Resulting from Internal Discharges.—Mason. (See 1688.)

621.317.335.3.029.64† : 546.217 **1707**

Dielectric Constant and Refractive Index of Air and its Principal Constituents at 24 000 Mc/s.—L. Essen & K. D. Froome. (*Nature, Lond.*, 31st March 1951, Vol. 167, No. 4248, pp. 512–513.) A high-accuracy method developed at the National Physical Laboratory consists basically in observing the resonance frequency of a cavity (*a*) when filled with the gas, and (*b*) when evacuated. All frequency measurements are referred directly to quartz standard oscillators, and a high-Q cavity in a bridge circuit is used to obtain the necessary sensitivity. The value of the dielectric constant found for dry CO_2-free air at N.T.P. is $1{\cdot}0005764 \pm 2 \times 10^{-7}$. Results are compared with those obtained from other recent researches.

621.317.34 : 621.392.26† **1708**

Power Adjustment for Plane Waves in Waveguides.—Mataré. (See 1565.)

621.317.341 : 621.315.212 **1709**

The Use of a Piston Attenuator for Cable Testing in the Frequency Range 1–30 Mc/s.—E. C. H. Seaman, D. A. Crow & C. G. Chadburn. (*P.O. elect. Engrs' J.*, Jan. 1951, Vol. 43, Part 4, pp. 192–197.) The instrument described has been designed for insertion-loss measurements on the more recently developed types of h.f. coaxial cables. Crystal-controlled spot frequencies in the range 1–30 Mc/s are available from a portable signal generator in which piston attenuators are incorporated. These permit accurate measurement of the ratio of the input and output voltages of a cable.

621.317.342 : 621.392 **1710**

The Calculation of Phase Constant for Small Differences of Open and Closed Impedance.—P. R. Bray. (*P.O. elect. Engrs' J.*, Jan. 1951, Vol. 43, Part 4, pp. 200–201.) A note on the use of a bridge for the measurement of the phase constant of a transmission line. The derivation of the phase constant is simplified by using directly the difference between the bridge settings for the open-circuit and closed-circuit conditions.

621.317.41 **1711**

An Oscillation Type Magnetometer.—J. H. E. Griffiths & J. R. MacDonald. (*J. sci. Instrum.*, Feb. 1951, Vol. 28, No. 2, pp. 56–58.) Description of a method developed for measuring the saturation magnetization of small Ni disks of thickness down to 0·1 μ. Measurements were also made on Ni and supermalloy disks of thickness 0·11 mm. The sample under test is made to oscillate in a uniform field parallel to the plane of the disk, the axis of rotation being a diameter normal to the field.

621.317.727.029.63 **1712**

Radio-Frequency Micropotentiometer.—(*Tech. Bull. nat. Bur. Stand.*, March 1951, Vol. 35, No. 3, pp. 33–34.) Brief account of a coaxial type of device developed by M. C. Selby and making available, without the use of attenuators, accurate voltages of 1–10^5 μV at impedances of the order of milliohms and at frequencies up to 1 kMc/s.

621.317.729.088 **1713**

Factors Limiting the Accuracy of the Electrolytic Plotting Tanks.—P. A. Einstein. (*Brit. J. appl. Phys.*, Feb. 1951, Vol. 2, No. 2, pp. 49–55.)

621.317.73.029.64 **1714**

U.H.F. Measurements with the Type 874-LB Slotted Line.—R. A. Soderman & W. M. Hague. (*Gen. Radio Exp.*, Nov. 1950, Vol. 25, No. 6, pp. 1–11.) The equipment comprises oscillator, coaxial slotted line with travelling e.s. probe, and crystal or receiver detector. The frequency range is 300–4 000 Mc/s. The use of the line for impedance measurements is described, and sources of error are discussed.

621.317.733 **1715**

Automatic A.C. Bridges.—J. F. Graham. (*Electronics*, Feb. 1951, Vol. 24, No. 2, pp. 110–116.) The design of bridge and detector circuits for production-line measurements of inductance, capacitance and resistance is discussed. These depend on a phase discriminator which gives zero output for input voltages 90° out of phase. In one system the standard variable circuit elements are adjusted by servo-motors until a balance is obtained. Graphical methods are used for determining the phase and amplitude of the bridge unbalance voltage.

621.317.733 **1716**

New Version of Schering Bridge.—J. H. Jupe. (*Electronics*, Feb. 1951, Vol. 24, No. 2, pp. 214..218.) Suitable for voltages up to 200 kV. The detector unit uses a 3-stage RC-coupled amplifier with a thermionic rectifier and d.c. moving-coil milliammeter for indication of balance.

621.317.733.011.4.029.53/.55 **1717**

A Capacitance Bridge for High Frequencies.—J. S. Mendousse, P. D. Goodman & W. G. Cady. (*Rev. sci. Instrum.*, Dec. 1950, Vol. 21, No. 12, pp. 1002–1009.) A bridge for measurements in the megacycle range is described. The unbalance voltage is rectified by a Ge-crystal rectifier and measured as a small direct voltage. For examining the vibration modes and measuring the Q of piezoelectric crystals, the variable capacitor is set at a value equal to the parallel capacitance of the crystal and the output voltage is recorded graphically while the frequency is slowly varied over the resonance range. Typical records are shown, illustrating the performance of crystals at various frequencies and under different mechanical loads. Theory of the bridge is given and sources of error are discussed.

621.317.755 : 621.3.015.3 **1718**

An Oscilloscope for the Observation of Long-Duration Transients.—A. E. Ferguson. (*J. sci. Instrum.*, Feb. 1951, Vol. 28, No. 2, pp. 52–56.) long-persistence screen for the obs of duration 30 sec or more is des timebase provides either repetitive or

621.317.755 : 621.317.772

Aids to C.R.O. Display of Phase Angle.—(*Electronics*, Feb. 1951, Vol. 24, No. 2, pp. Some simple methods of applying passive ci phase-angle indication on a c.r.o., for use at frequencies.

621.317.757 : 534.41 **172**

Analysis of a Spectrum of Very Low Frequencies by means of Magnetic Tone-Frequency Equipment.—K. H. R. Weber. (*Funk u. Ton*, Dec. 1950, Vol. 4, No. 12, pp. 619–627.) The principle of the method is the multiplication of the original frequencies so that an analyser with small bandwidth may be used. The signal is recorded magnetically at a low tape velocity, 2·57 cm/s, and reproduced at the normal velocity of 77 cm/s, so that frequencies are multiplied by 30. The complete apparatus is described, including a test oscillator generating very low frequencies (1–300 c/s) by electromechanical means.

621.317.761 **1721**

Production-Line Frequency Measurement.—G. J. Kent. (*Electronics*, Feb. 1951, Vol. 24, No. 2, pp. 97–99.) A description of equipment for the accurate measurement of the frequencies of crystals used in monitors and oscillators. Frequencies up to 10 Mc/s can be measured rapidly by relatively unskilled operators to within 1 or 2 c/s. The frequency standard is a 100-kc/s oscillator, the 50th harmonic of which is kept at zero beat with the 5-Mc/s signal from WWV. The first digit in the unknown frequency is obtained from the calibration of a communications receiver, the remaining digits being evaluated in turn, using methods of bracketing between known harmonics or subharmonics of the master oscillator, until the last two digits can be obtained by comparison with a calibrated a.f. oscillator, using Lissajous figures.

621.317.761.029.426 **1722**

Apparatus for Accurate Measurement of Frequency.—W. S. Wood. (*Engineering, Lond.*, 23rd Feb. 1951, Vol. 171, No. 4439, p. 216.) A description of portable apparatus for the measurement of frequencies near 50 c/s or multiples thereof, with an accuracy to within $\pm$ 0·1%. A standard tuning fork of variable known frequency is used to discharge a capacitor periodically, and the resulting sawtooth voltage is applied to the x plates of a c.r.o. The voltage whose frequency is required is applied to the y plates, and the frequency difference can be obtained by observing the speed of the trace drift, or the fork frequency can be varied to produce a stationary trace.

621.317.761.029.64 **1723**

A Frequency Meter for Microwave Spectroscopy.—J. D. Rogers, H. L. Cox & P. G. Braunschweiger. (*Rev. sci. Instrum.*, Dec. 1950, Vol. 21, No. 12, pp. 1014–1015.) Description of the operation of equipment using known absorption lines as frequency standards. By mixing signals of unknown microwave frequency f_x, a standard microwave frequency f_o, and known r.f. signals nf_c from a crystal-controlled harmonic generator, beats of frequency f_r can then be determined from the relation

$$f_r = \pm m(f_x - f_o) \pm nf_c$$

Measurements by this method of the frequencies of methanol absorption lines, using NH_3 absorption lines as frequency standards, show that frequencies of the order of 25 kMc/s can be measured to within $\pm$ 0·03 Mc/s.

621.317.772 **1724**

A Simple Phase-Measuring Circuit.—R. A. Seymour. (*P.O. elect. Engrs' J.*, Jan. 1951, Vol. 43, Part 4, pp. 198–199.) A description and analysis of an addition circuit used for measuring the phase angle between two sinusoidal signals having frequencies in the range 50 c/s to 200 kc/s. Phase angles between 0° and 60° can be measured to within ± 1°, but larger errors occur as the angle approaches 90°.

621.396.615.015.7† **1725**

An Incremental-Delay Pulse Generator.—G. F. Montgomery. (*Electronics*, Feb. 1951, Vol. 24, No. 2, pp. 218..226.) The equipment uses a 100-kc/s oscillator with a chain of four frequency dividers of the ring-counter type, and provides three 25-c/s pedestal outputs. Two of these are variable in phase, in 0·1-ms steps over the 40-ms cycle. Timing marks at intervals of 0·1, 1, 10 and 40 ms are generated, and also a 50-c/s output for operating a clock.

621.396.615.11.001.4 : 621.396.619.13 **1726**

Complex-Tone Generator for Deviation Tests.—F. A. Bramley. (*Electronics*, Feb. 1951, Vol. 24, No. 2, pp. 184..196.) Frequency-deviation and modulation-deviation measurements are often inconsistent when voice-testing is used. A two-valve battery-operated generator is described for producing a standard complex tone for such tests.

621.396.62.001.4 **1727**

Performance Tests on Radio Receivers.—N. S. Smith. (*Telecommun. J. Aust.*, Feb. 1949, Vol. 7, No. 3, pp. 155–168.) An outline of tests for sensitivity, selectivity, gain, distortion, frequency drift, calibration, etc., and description of suitable equipment.

621.396.645.029.4/.5].001.4 **1728**

A Null Method of Measuring the Gain and Phase Shift of Comparatively Low Frequency Amplifiers.—T. Baldwin & J. H. Littlewood. (*Electronic Engng*, Feb. 1951, Vol. 23, No. 276, pp. 65–66.) Description of a simple, practical method requiring only an accurate attenuator calibrated in 0·1-db steps, a c.r.o., a variable decade capacitor, a known resistor, and a v.f.o. with adequate output.

621.396.822(083.74) **1729**

Noise Figure Standards.—(*Tech. Bull. nat. Bur. Stand.*, Feb. 1951, Vol. 35, No. 2, pp. 27–28.) The National Bureau of Standards provides a calibration service for the noise figure of linear electrical networks in the frequency range 500 kc/s–30 Mc/s. The apparatus comprises a temperature-limited noise diode, a two-terminal source network, the test network (four- or two-terminal), an attenuator and a sensitive voltmeter. The method is valid for a matched or unmatched condition of input impedance.

OTHER APPLICATIONS OF RADIO AND ELECTRONICS

531.775 : 621.38 **1730**

A Precision Electronic Tachometer.—S. W. Punnett & H. G. Jerrard. (*Electronic Engng*, Feb. 1951, Vol. 23, No. 276, pp. 55–58.) For another account see 177 of January.

534.321.9 : 539.32 : 669 **1731**

Ultrasonics in Metallurgy.—(*Metal Ind., Lond.*, 23rd Feb. 1951, Vol. 78, No. 8, p. 146.) Brief account, taken from an address by Sir Ben Lockspeiser to the Scottish branch of the Institute of Physics, of ultrasonic methods of determining the elastic constants of metals. The methods were developed by G. Bradfield at the National Physical Laboratory and are particularly useful when the dimensions of the sample are small. See also *Engineer, Lond.*, 9th March 1951, Vol. 191, No. 4963, p. 318.

534.321.9 : 621.791.3 **1732**

Ultrasonic Soldering Irons.—B. E. Noltingk & E. A. Neppiras. (*J. sci. Instrum.*, Feb. 1951, Vol. 28, No. 2, pp. 50–52.) Two types are described, one for normal use on sheet aluminium or light alloy, while in the other the vibrations are communicated to a bath of solder in which small pieces of metal, or foil or wire, can be tinned by dipping. A compact electronic unit furnishes 50 W at 22 kc/s for energizing the magnetostriction transducer.

535.82 : 621.397.611.2 **1733**

A Flying-Spot Microscope.—J. Z. Young & F. Roberts. (*Nature, Lond.*, 10th Feb. 1951, Vol. 167, No. 4241, p. 231.) A c.r. tube providing a television raster of high brilliance and short time-constant is placed in front of the eyepiece of a microscope. The objective produces a minute spot of light that scans the preparation under examination. The amount of light transmitted is determined by the density of the specimen and is picked up by a multiplier photocell, the output of which is used to modulate a projection-type c.r. tube, the raster of which is locked to the scanning raster. A display some 3 ft square can be obtained with continuously variable magnification, brightness and contrast. Resolution and quantum efficiency are considerably greater than in an ordinary microscope, and quantitative analysis becomes a possibility.

536.58 : 621.316.076.7 **1734**

Electric Controllers for Laboratory Furnaces.—M. H. Roberts. (*Electronic Engng*, Feb. 1951, Vol. 23, No. 276, pp. 51–54.) Detailed descriptions are given of the design and construction of two types of electronic temperature control, giving regulation to within ± 1° C in 1-kW furnaces running at 400–1 000° C. The instruments are based on the amplification of the out-of-balance voltage produced in a bridge circuit by an electrical temperature-measuring device, such as a resistance thermometer, forming one arm of the bridge.

In the simpler arrangement a hot-wire vacuum switch gives two-positional control; in the other a saturable inductor in the amplifier output circuit gives control proportional to the out-of-balance voltage, and is particularly useful in the regulation of creep-testing furnaces.

537.533.73 : 621.385.032.2 **1735**

Electron Diffraction in Valve Technique.—H. A. Stahl. (*Schweiz. Arch. angew. Wiss. Tech.*, Dec. 1950, Vol. 16, No. 12, pp. 359–369.) Review of the application of the electron-diffraction camera in examination of electrode surfaces, etc., in high-vacuum and gas-filled discharge tubes. Details and illustrations of diffraction patterns for various substances are given and discussed.

621.317.083.7 **1736**

Telemetering System for Radioactive Snow Gage.—J. A. Doremus. (*Electronics*, Feb. 1951, Vol. 24, No. 2, pp. 88–91.) Details of unattended equipment based on the attenuation of γ radiation. Data from several sites are transmitted via f.m. repeater stations to a central recording station.

621.38.001.8 : 786.6 **1737**

Electronic Music for Four.—L. A. Meacham. (*Electronics*, Feb. 1951, Vol. 24, No. 2, pp. 76–79.) Description of an 'organ' with separate soprano, alto, tenor and bass oscillators whose frequencies are adjusted by four

players operating control arms over tone-graduated quadrants. The four oscillators feed a single loudspeaker through a common amplifier.

621.384.62† **1738**

Measurements on a Linear Accelerator.—P. Grivet & J. Vastel. (*C. R. Acad. Sci., Paris*, 26th Feb. 1951, Vol. 232, No. 9, pp. 809–810.) Report of preliminary tests of one section of an accelerator designed for 4–5 MeV. The h.f. energy is supplied by a magnetron with peak power 0·5 mW. Pulses of 2-μs duration and 100/s repetition frequency give 0·4-MeV electrons with a peak current of about 10 mA. The apparatus in its final form will be entirely demountable and the high-power pulses will be produced by a rotating arc.

621.385.38.001.8 : 621.314.653 : 621.791.7 **1739**

Load Sharer for Welder Ignitrons.—G. M. Chute. (*Electronics*, Feb. 1951, Vol. 24, No. 2, pp. 71–73.) A flip-flop thyratron circuit transfers the welding load automatically from one pair of ignitrons to another every two seconds. This reduces the duty cycle for the ignitrons, permitting the use of a given welder for a heavier weld or a longer time than was originally specified.

621.385.833 **1740**

An Objective for Use in the Electron Microscopy of Ultra-thin Sections.—J. Hillier. (*J. appl. Phys.*, Feb. 1951, Vol. 22, No. 2, pp. 135–137.)

621.385.833 **1741**

The Refractive Index of Electron Optics and its Connection with the Routhian Function.—W. Glaser. (*Proc. phys. Soc.*, 1st Feb. 1951, Vol. 64, No. 374B, pp. 114–118.) The derivation of the electronoptical refractive index from Hamilton's principle is discussed. Criticisms by Ehrenberg & Siday (1455 of 1949) of the method, first introduced by the author in 1933, are shown to be invalid. To prove the general applicability of the method, the isotropic refractive index of an axially symmetrical field is obtained.

621.385.833 **1742**

Optical Properties of the Independent Electrostatic [electron] **Lens with Thick Central Electrode.**—É. Regenstreif. (*C. R. Acad. Sci., Paris*, 19th Feb. 1951, Vol. 232, No. 8, pp. 710–712.) Calculations presented previously (see 1455 of June) are generalized and applied to determine transgaussian electron trajectories. The theoretical results agree well with values of converging power found experimentally by Heise & Rang.

621.385.833 **1743**

The Technique of the OSW [Oberspreewerk] **Electron Microscope.**—F. Eckart. (*Elektrotechnik, Berlin*, Dec. 1950, Vol. 4, No. 12, pp. 414–415 & Jan. 1951, Vol. 5, No. 1, pp. 32–35.) Short discussion of basic principles and of the resolving power as dependent on the electronoptical properties of the various lenses, together with an illustrated description of the Type-OSW2748 instrument and its stabilized power supply unit, which provides voltages of 45, 65, 85 and 100 kV and lens currents constant to within 5 parts in 10^5.

621.387.4† : 621.396.823 **1744**

Line-Noise Interference with Particle Counting.—C. G. Goss & F. M. Glass. (*Nucleonics*, Feb. 1951, Vol. 8, No. 2, pp. 66–69.) The characteristics of noise voltages encountered on laboratory lighting and power wiring are briefly discussed, with particular reference to that due to faulty fluorescent lamps. Precautions to be taken to minimize the effects of the noise are described. Particulars are given of a simple monitor which, when connected to the mains, provides audible and visual warning of the presence of excessive noise voltages.

621.387.464† : 621.396.645 **1745**

Distributed Coincidence Circuit.—Wiegand. (See 1599.)

621.395.625.3 **1746**

Magnetic Recording Systems in Product Design.—Javitz. (See 1560.)

621.398 **1747**

Radio-Controlled Ship Models.—S. G. Lankester & S. G. Dreier. (*Engineer, Lond.*, 9th March 1951, Vol. 191, No. 4963, p. 319.) A system using pulse-code tone modulation is described for the control of models used in steering investigations. In order to reduce the delay in transmission of orders which this system involves, a system using variable-frequency a.m. is being developed.

621.57 : 621.318 **1748**

The Magnetic-Fluid Clutch.—S. F. Blunden. (*Engineer, Lond.*, 23rd Feb. 1951, Vol. 191, No. 4961, pp. 244–246.) Description of investigations carried out at R.R.D.E., Malvern, on clutches of the type developed by Rabinow (2585 of 1950) at the National Bureau of Standards.

681.142 : 536.7 **1749**

Predicting Phase Behavior with Digital Computers.—T. J. Connolly, S. P. Frankel & B. H. Sage. (*Elect. Engng, N.Y.*, Jan. 1951, Vol. 70, No. 1, p. 47.) Summary of A.I.E.E. Fall General Meeting paper. An account of the application of punched-card computing equipment to the evaluation of the conventional thermodynamic properties of pure substances and mixtures.

621.38.001.8 **1750**

Electronics Manual for Radio Engineers. [Book Review]—V. Zeluff & J. Markus. Publishers: McGraw-Hill, New York & London, 1949, 879 pp., 57s. (*Electronic Engng*, Feb. 1951, Vol. 23, No. 276, pp. 75–76.) "This manual contains 289 of the more important articles which appeared in . . . *Electronics* during the period 1940 to 1948 . . . [It] is particularly valuable for the broad survey it provides of the most recently developed techniques in electronics, much of the information presented is not available even in the most recently published textbooks in this field."

621.385.83 **1751**

Elektronenoptik: Vol. 1. [Book Review]—A. A. Rusterholz. Publishers: Birkhäuser, Basel, Switzerland, 1950, 249 pp., 65s. (*Electronic Engng*, Feb. 1951, Vol. 23, No. 276, p. 76.) ". . . a complete re-statement of the classical parts of geometrical electron optics, in plane or rotationally symmetrical fields, without space charge."

PROPAGATION OF WAVES

538.566 **1752**

On the Propagation of Energy in Linear Conservative Waves.—Broer. (See 1621.)

621.396.11 + 535.222 **1753**

Proposed New Value for the Velocity of Light.—Essen. (See 1609.)

621.396.11 **1754**

Ionosphere Data Deduced from Direct Tests on Radiotelegraphic Links in the Italian Army Network: Part 2.—S. Silleni. (*Ann. Geofis.*, Oct. 1950, Vol. 3, No. 4, pp. 567–578.) Continuation of 1753 of 1950, further analysing the results obtained in some 60 000 calls

received, involving 12 different stations. When the percentage probability of communication is plotted against the ratio of actual frequency to m.u.f., the curve obtained nearly coincides with a Gaussian distribution curve. In order to guarantee 95% probability of communication between any two points, a mean operating frequency $\not> 0{\cdot}73$ times the m.u.f. was found to be required. Increasing the power used from 40 W to 1 kW reduced the probability of failure of communications by a factor of 4.

621.396.11 : 532.517.4 : 551.510.5 **1755**

Spectrum of Atmospheric Turbulence.—L. F. Richardson: E. C. S. Megaw. (*Nature, Lond.*, 24th Feb. 1951, Vol. 167, No. 4243, p. 318.) Comment on 973 of April (Megaw) and author's reply.

621.396.11 : 551.510.535 **1756**

Echoes from the D and F_2 Layers on a Frequency of 21 Mc/s?—E. Gherzi. (*Nature, Lond.*, 10th March 1951, Vol. 167, No. 4245, p. 412.) Pulses on 21·7 Mc/s were received at Macau between 0900 and 1200 G.M.T. during November and December 1950 from an unidentified distant source. The components received are thought to be the ground ray, which frequently showed very marked fading, and reflections from the D and F_2 layers.

621.396.11 : 551.594.6 **1757**

The Propagation of a Radio-Atmospheric.—Budden. (See 1652.)

621.396.11 : 621.317.353.3† **1758**

Self-interaction of Radio Waves in the Ionosphere.—M. Cutolo. (*Nature, Lond.*, 24th Feb. 1951, Vol. 167, No. 4243, pp. 314–315.) A description of experiments indicating that, in transmission through the ionosphere, there is a reduction in the percentage modulation of radiation having a frequency near to the gyrofrequency. The percentage modulation decreases as the modulation frequency increases.

621.396.11 : 621.396.65 **1759**

Projected New Radio-Telephone Link from the Mainland to Tasmania: Propagation Measurements.—O. M. Moriarty. (*Telecommun. J. Aust.*, Oct. 1949, Vol. 7, No. 5, pp. 281–299.) A detailed account of transmission tests on frequencies of 58 Mc/s and 158 Mc/s on a two-section link between Tasmania and the mainland via Flinders Island. Observed values of attenuation during the period 1947–1949 were in most cases within a few db of the calculated values. The measurements of received signals enabled the range of fading to be estimated. If frequency diversity is not used, an allowance of 20 db for fading will be adequate except for a deep fade which occurs on the average less than once a fortnight. An extra allowance of 20 db would probably be sufficient to account also for this type of fading. The results in general indicate that a high-quality multi-channel link operating on a frequency of about 60 Mc/s with a power of 50 W could be established between Wilson's Promontory and Tasmania, with a repeater at Flinders Island.

621.396.11.029.45 : 551.594.6 **1760**

The Waveforms of Atmospherics and the Propagation of Very-Low-Frequency Radio Waves.—P. W. A. Bowe. (*Phil. Mag.*, Feb. 1951, Vol. 42, No. 325, pp. 121–138.) The responses of narrow-band receivers to individual radio atmospherics have been studied in order to investigate the propagation over the earth's surface of waves having frequencies between 2 and 10 kc/s. Atmospherics from a fixed distance are sufficiently uniform to enable the relative attenuations of different frequencies to be deduced. Frequencies below 8 kc/s are heavily attenuated during the daytime, particularly during sudden ionospheric disturbances, but at night such frequencies are propagated freely. The results confirm and extend those obtained recently by Gardner (1473 of June); they are consistent with the theory proposed by Budden (1652 above).

621.396.11.029.51 **1761**

Low-Frequency Radio-Wave Propagation by the Ionosphere, with particular reference to Long-Distance Navigation.—C. Williams. (*Proc. Instn elect. Engrs*, Part III, March 1951, Vol. 98, No. 52, pp. 81–99. Discussion, pp. 99–103.) A discussion of radio-wave propagation in the 70–300-kc/s band, with particular reference to the phase or time displacement of the received signal due to the ionosphere-reflected component. Time-error curves are shown for typical propagation conditions, both for day and night and at various frequencies. The characteristics of the errors which occur are discussed and the magnitude of navigational errors arising therefrom are deduced, using suitable examples.

From phase and amplitude observations made with receivers in aircraft, during both day and night, the relative values of the ground-reflected and the ionosphere-reflected wave components were obtained as a function of distance from the transmitters. The mean height deduced for the reflecting layer is 70 km for day-time and 90 km at night, with corresponding oblique-incidence reflection coefficients of 0·05 and 0·25.

Collation of data obtained at fixed receiving points, using Consol, Decca and Post Office position indicator transmitters, shows that navigational accuracy is improved by making the base-line distances as great as possible.

621.396.81 : 551.510.535 : 535.361.2 **1762**

The Scattering of Radio Waves.—W. Dieminger. (*Proc. phys. Soc.*, 1st Feb. 1951, Vol. 64, No. 374B, pp. 142–158.) A review is given of previous work on the scattering of radio waves returned from the ionosphere. Four types of scatter are briefly described, namely, E, F, G and 2F scatter. The last of these is treated at length, and various experiments are described which lead to the conclusion that the scattering in this case takes place at the surface of the ground and not in the sporadic-E layer. The nature of the scattering to be expected from the ground is considered, and it is shown that large-scale irregularities are of major importance. The influence of scattering on short-wave communication and direction finding is discussed.

621.396.812.3 : 537.591 **1763**

The Cosmic-Ray Intensity and Radio Fade-Outs.—D. W. N. Dolbear, H. Elliot & D. I. Dawton. (*J. atmos. terr. Phys.*, 1951, Vol. 1, No. 3, pp. 187–188.) Analysis of cosmic-ray data obtained during the occurrence of 35 fade-outs indicates an average increase of intensity of about 0·3% on the sunlit side of the earth during a fade-out. No such increase was found corresponding to fade-outs recorded on the other side of the earth.

RECEPTION

551.594.6 **1764**

Atmospheric Noise Levels at Radio Frequencies near Darwin, Australia.—D. E. Yabsley. (*Aust. J. sci. Res., Ser. A*, Sept. 1950, Vol. 3, No. 3, pp. 409–416.) Between 25th August 1944 and 31st October 1945, a practically continuous record of the average level of atmospheric radio noise at a frequency of 1·93 Mc/s was obtained near Darwin, in north-western Australia. A few measurements were also made at a frequency of 5·9 Mc/s. The noise-measurement programme is described and the results obtained are presented graphically.

621.396.62.001.4 **1765**

Performance Tests on Radio Receivers.—Smith. (See 1727.)

621.396.81 : 621.396.932 **1766**

450-Mc/s Mobile Radio Tests.—A. J. Aikens & L. Y. Lacy. (*FM-TV*, Jan. 1951, Vol. 11, No. 1, pp. 26–27..36.) Reprint. See 734 of March.

621.396.828.1 : 621.396.645.018.424† **1767**

Wide-Band Amplifier for Central-Antenna Installations.—Crawley. (See 1601.)

STATIONS AND COMMUNICATION SYSTEMS

621.39 **1768**

Inaugural Address [as President of the I.E.E.].—A. J. Gill. (*Proc. Instn elect. Engrs*, Part I, Jan. 1951, Vol. 98, No. 109, pp. 1–11.) A review of recent developments in telecommunication engineering in the public services of Britain.

621.39.001.11 : 519.21 **1769**

On the Relation between the Quantity of Information in the Fisher Sense and in the Wiener Sense.—M. P. Schutzenberger. (*C. R. Acad. Sci., Paris*, 5th March 1951, Vol. 232, No. 10, pp. 925–927.)

621.395.645 **1770**

A Negative-Impedance Repeater.—J. L. Merrill, Jr. (*Elect. Engng, N.Y.*, Jan. 1951, Vol. 70, No. 1, pp. 49–54.) A.I.E.E. Fall General Meeting paper. The repeater described comprises a transformer, an amplifier and associated network arranged as a complete unit for direct insertion in a 2-wire line. It can be used to decrease transmission loss, to produce a low-loss line without reflection effects, or to neutralize a lumped positive-impedance irregularity.

621.396 : 355.58 **1771**

Defense Communication in New York City.—A. A. McK. (*Electronics*, Feb. 1951, Vol. 24, No. 2, pp. 74–75.) A description, illustrated by block diagrams, of the warning facilities available in case of air attack. These include general broadcasts and special links to police and fire stations. Regular testing of the specially installed line connections is carried out. An ultrasonic-modulation system may also be used to activate publicly installed receivers with giant loudspeakers, the receivers being muted except when warnings are broadcast.

621.396 (941) **1772**

The Installation of the Radio-Telegraph Network in North-West Western Australia.—J. Mead. (*Telecommun. J. Aust.*, Oct. 1949, Vol. 7, No. 5, pp. 303–307.) Description of the equipment of a chain of stations linking Geraldton to Wyndham, a circuit of about 1 800 miles; any section can be quickly brought into service in case of a breakdown of the land-line equipment. The transmitters are battery fed and crystal controlled, four frequencies being available in the range 2·5–10·0 Mc/s; they give an output of 11 W at 2·5 Mc/s to a high-impedance 600-Ω aerial, which is used for both transmission and reception. Superheterodyne receivers, using vibrator h.v. supplies, cover the range 200 kc/s–30 Mc/s except for a small gap at 535 kc/s near the i.f. used. Telegraphy operation is normal practice, using either headphones or loudspeaker for reception, but where no operators are available, telephony is used.

621.396.5 **1773**

Control-Terminal Equipment for Overseas Radio-Telephone Services.—W. O. Gibberd. (*Telecommun. J. Aust.*, June 1949, Vol. 7, No. 4, pp. 232–236.) A short description, with block diagrams, of the principal features of the Western Electric Type-C3 radio control-terminal equipment, four sets of which are installed in Sydney on the London and San Francisco radiotelephone circuits. The use of such equipment reduces to some extent the effects of variations in the radio circuit.

621.396.5 : 621.396.931 **1774**

Mobile Radio-Telephone Services.—N. S. Feltscheer. (*Telecommun. J. Aust.*, Feb. 1950, Vol. 7, No. 6, pp. 322–326.) Discussion of the general characteristics of and equipment for a proposed service providing communication facilities between any suitably equipped vehicle within a prescribed area (initially within capital cities) and any telephone connected to the public network.

621.396.65 : 621.311 **1775**

Radio Communications for Power Systems.—R. E. Martin. (*Engineering, Lond.*, 26th Jan. 1951, Vol. 171, No. 4435, pp. 114–116.) Abridged version of paper read at the Conférence Internationale des Grands Réseaux Électriques à Haute Tension, Paris, July 1950. Radio links between control centres and repair and maintenance gangs are extremely useful. Either simplex, two-frequency simplex, or duplex operation is used by the British Electricity Authority in the 70–90-Mc/s band. Fixed stations, using high vertical $\lambda/2$ dipoles, with 10-, 12- or 50-W r.f. output, operated from 230-V 50-c/s mains, may be remotely controlled by radio link or land-line from the control centre. Average coverage is approximately 400 square miles. Mobile stations, installed in the maintenance trucks, use a $\lambda/4$ whip aerial and operate from the vehicle battery. A.m. is in general preferred to f.m. because of greater ease of maintenance and superior intelligibility at long range. The speech amplifier of the mobile station may also be used for public-address work. A voice-frequency-operated calling system has been developed.

621.396.65 : 621.396.11 **1776**

Projected New Radio-Telephone Link from the Mainland to Tasmania: Propagation Measurements.—Moriarty. (See 1759.)

621.396.65 : [621.396.5 + 621.317.083.7 **1777**

Microwave Applications to Bonneville Power Administration System.—R. F. Stevens & T. W. Stringfield. (*Elect. Engng, N.Y.*, Jan. 1951, Vol. 70, No. 1, pp. 29–33.) Essential text of A.I.E.E. Summer and Pacific General Meeting paper. A description is given of the proposals for the provision of general telephone facilities, telemetering of power output, supervisory control, fault location, etc., by a system which will use microwave radio links where many communication channels are required, and power-line carrier or leased telephone circuits where few channels are needed.

621.396.65.029.6 **1778**

Very-High-Frequency and Ultra-High-Frequency Radio Links in the Australian Post Office Communication Network.—S. J. Ross. (*J. Instn Engrs Aust.*, Jan./Feb. 1951, Vol. 23, Nos. 1/2, pp. 11–20.) A discussion of the problems involved in the introduction of v.h.f. and u.h.f. R/T systems into the telecommunication network. The planning and engineering of such systems are considered, reference being made to site-selection problems and to the calculation of propagation-path data. A short account is included of multichannel equipment recently installed in Queensland for communication between Brisbane and Redcliffe. This operates on a carrier frequency in the 4 600–4 800-Mc/s band, p.w.m. being used in conjunction with a time-sharing system to provide eight channels. Two further systems will soon be installed; these will provide 23 channels each, the operating frequency being 2 000–2 500 Mc/s.

621.396.712 : 621.396.619.11/.13 **1779**

V.H.F. Transmitting Station at Wrotham.—(*Engineer, Lond.*, 16th Feb. 1951, Vol. 191, No. 4960, pp. 221–222.) A general description is given of the f.m. and a.m. transmitters operating respectively at powers of 25 kW and 18 kW and on carrier frequencies of 91·4 Mc/s and 93·8 Mc/s, of the housing, control and monitoring of the equipment and of the mast, feeder, aerial system and power supplies.

621.396.82 : 621.396.41 **1780**

Interference in Multi-Channel Circuits.—L. Lewin. (*Wireless Engr*, March 1951, Vol. 28, No. 330, p. 98.) Correction to paper abstracted in 986 of April.

621.396.93 **1781**

Radio in the Jungle.—"Pronto". (*Wireless World*, Feb. 1951, Vol. 57, No. 2, pp. 73–74.) The difficulties of maintaining military communications in Malaya due to the dense jungle, high humidity and high level of atmospherics at night, are briefly reviewed. The ideal equipment should operate on the sky wave at crystal-controlled frequencies between 4 and 10 Mc/s; it should be light yet robust, simple to operate, have facilities for both speech and Morse, and must be fully tropicalized.

621.396.931 **1782**

Design of Mobile Two-Way Radio Communication Equipment at 152-174 Mc/s.—R. A. Beers, W. A. Harris & A. D. Zappacosta. (*Broadcast News*, Jan./Feb. 1951, No. 62, pp. 56–65.) More detailed description of equipment noted in 989 of April.

SUBSIDIARY APPARATUS

621.314.58 **1783**

Methods of increasing the Power Rating of Vibratory Convertors.—K. H. Dixey & C. V. Wilman. (*Proc. Instn elect. Engrs*, Part III, March 1951, Vol. 98, No. 52, pp. 105–111.) The power limitations of convertors are discussed and two methods by which the difficulties may be overcome are described. Both make use of special circuits designed to reduce the current carried by the contacts at the moment of breaking. Reference is also made to methods of dealing with certain vibrator defects and with transformer surges. Examples are given of practical applications of the circuits described.

621.314.58.001.4 **1784**

Test Procedures for Checking Performance of Vibrator Power Supplies.—Roth. (See 1702.)

621.396.68 : 621.317.755 **1785**

E.T.H. from an R.F. Oscillator.—C. J. Dickinson. (*Wireless World*, Feb. 1951, Vol. 57, No. 2, pp. 70–72.) Construction details are given of a simple unit providing a current of 1 mA at 2 kV, or a greater current at a lower voltage, from an oscillator operated at a frequency in the range 20–100 kc/s.

TELEVISION AND PHOTOTELEGRAPHY

621.397.5 : 535.623/.624 **1786**

Comparative Analysis of Color TV Systems.—A. V. Loughren & C. J. Hirsch. (*Electronics*, Feb. 1951, Vol. 24, No. 2, pp. 92–96.) General analysis, with particular reference to band sharing and the use of the 'mixed-highs' principle in the dot-sequential system. See also 250 of January (Bedford) and 466 of February (Dome).

621.397.5 : 535.623 **1787**

Color Television Systems.—F. Shunaman. (*Radio-Electronics*, Jan. 1951, Vol. 22, No. 4, Annual Television Number, pp. 20–22, 32.) Description, with illustrations in colour, of the C.B.S. field-sequential, the C.T.I. line-sequential and the R.C.A. dot-sequential systems. See also 249 of January.

621.397.5 : 535.623 **1788**

Color Fundamentals for TV Engineers.—Fink. (See 1610.)

621.397.5 : 535.623 **1789**

Progress in Dot-Sequential Color TV.—D.G.F. (*Electronics*, Feb. 1951, Vol. 24, No. 2, pp. 80–81.) The newest tricolour tube has higher resolution (600 000 phosphor dots in a screen of diameter 13½ in.), and red and blue phosphors of truer colours and greater brightness. Improved circuits reduce the visibility of the dot structure, and eliminate spurious patterns due to beats between the image structure and the dot structure.

621.397.6 **1790**

A New Video Distribution System.—E. D. Hilburn. (*Tele-Tech*, Dec. 1950, Vol. 9, No. 12, pp. 28–30..75.) The 'bridged-T' and 'parallel-amplifier' arrangements are reviewed, and it is shown how their disadvantages are removed in the system described, where a single video power amplifier is used to feed a parallel pad network, each unit of which is connected to a terminated monitoring or switching unit.

621.397.6 : 621.396.67 **1791**

Television Totem Pole.—Kear & Hanson. (See 1568.)

621.397.611.2 **1792**

Image Tubes and Techniques in Television Film Camera Chains.—R. L. Garman & R. W. Lee. (*J. Soc. Mot. Pict. Televis. Engrs*, Jan. 1951, Vol. 56, No. 1, pp. 52–64.) A review of techniques used for televising motion-picture films. The flying-spot scanning technique and other methods using various types of storage and nonstorage pickup devices are discussed and compared in relation to such factors as signal/noise ratio, spurious signals, spectral response and transfer characteristic.

621.397.62 **1793**

Matching of the Frame Output Stage to the Deflection Coils in Television Receivers: Part 1—Low-Impedance Deflection Coils.—P. D. van der Knaap & J. Jager. (*Philips tech. Commun., Aust.*, 1950, No. 7, pp. 13–19.) Design calculations are given for frame output stages using low-impedance deflection coils and a matching transformer between these coils and the output valve. Calculations are based on the assumption that the saw-tooth current through the coils is linear, and an output transformer of reasonable dimensions is then chosen. Finally, the current which the preceding stage must be able to supply is computed.

621.397.62.004.64/.67 **1794**

Television Trouble-Shooting, Alignment Equipment and Procedures.—J. R. Meagher. (*Radiotronics*, Jan. 1951, Vol. 16, No. 1, pp. 4–26.) Reprinted from R.C.A. Service Co. publication. Common faults are described and step-by-step methods of discovering their causes and eliminating them are outlined. Servicing equipment and methods for re-alignment of television receivers are dealt with similarly.

621.397.621.2.002.2 **1795**

Characteristics of All-Glass Television Picture Bulbs.—J. L. Sheldon. (*J. Soc. Mot. Pict. Televis. Engrs*, Jan. 1951, Vol. 56, No. 1, pp. 65–74.) Methods of manufacturing the glass envelopes of television tubes are described. The relevant properties of the glass used are discussed, with particular reference to a new glass

(Corning Code 9010). The trends in the size and shape of tubes over the past few years are examined; the rectangular type will probably continue to be largely used. Methods are mentioned which can be adopted in the design of the envelope so as to reduce the glare arising from reflection at the tube face of light from external objects.

TRANSMISSION

621.396.619.14 : 621.385.5 **1796**

A Beam-Deflection Phase-Modulator Valve.—Hopkins. (See 1805.)

VALVES AND THERMIONICS

621.383.2 **1797**

Photoelectric Effect in Cs-O, Cs-S, Cs-Se and Cs-Te Photocathodes.—W. Baumgartner & N. Schätti. (*Helv. phys. Acta*, 10th Dec. 1950, Vol. 23, Nos. 6/7, pp. 869–873. In German.) Experimental determinations of spectral sensitivity.

621.385.002.2 : 668.393 : 679.52 **1798**

Cements used in Radio-Valve Construction.—C. Biguenet. (*Le Vide*, May 1948, Vol. 3, No. 15, pp. 451–453.) Nitrocellulose-base cements are used for support (e.g. of cathode carbonates) or for protection of valve elements during assembly. The physico-chemical properties of these cements are discussed briefly.

621.385.2/.5 **1799**

Principles of the Electrical Rating of High-Vacuum Power Tubes.—E. E. Spitzer. (*Proc. Inst. Radio Engrs*, Jan. 1951, Vol. 39, No. 1, pp. 60–69.) A rational system of ratings for power valves is described which enables the rating to be calculated from the results obtained in operating and life tests of the valve when used as a r.f. power amplifier and as a class-C oscillator. Rating factors are tabulated and a system for reducing the ratings of valves at h.f. is outlined.

621.385.2.011 **1800**

Theory of the Parallel Plane Diode.—A H. Taub & N. Wax. (*J. appl. Phys.*, Jan. 1951, Vol. 22, No. 1, p. 108.) Correction to paper noted in 777 of March.

621.385.2.032.216 **1801**

Some Characteristics of Diodes with Oxide-Coated Cathodes.—W. R. Ferris. (*RCA Rev.*, Dec. 1950, Vol. 11, No. 4, p. 568.) Corrections to paper abstracted in 2099 of 1949.

621.385.3 : 546.289 **1802**

Physics and Technology of Transistors.—E. H. Hungermann. (*Elektron Wiss. Tech.*, Oct./Nov. 1950, Vol. 4, Nos. 10/11, pp. 357–367.) Description of the mechanism of transistor action and review of the development in 1949, particularly in U.S.A., of the transistor amplifier. Illustrations and details of basic circuits are given.

621.385.3 : 546.289 **1803**

A High-Performance Transistor with Wide Spacing between Contacts.—B. N. Slade. (*RCA Rev.*, Dec. 1950, Vol. 11, No. 4, pp. 517–526.) Contact spacings between 0·010 and 0·020 in. give transistors with power gains of 20 to 30 db and current gains up to 25, at the same time reducing the average value of equivalent base resistance. Transit-time effects, however, cause the current gain to decrease more rapidly with frequency in transistors with wide-spaced than with narrow-spaced contact points. This disadvantage can be overcome by activating at wide spacing and operating with narrow-spaced contacts. High current gains and good frequency response can then be obtained if the Ge crystal material is properly selected.

621.385.3.012.6 + 621.385.5.012.6 **1804**

Valve Input Conductance at V.H.F. — Cathode Circuit Feedback.—E. E. Zepler. (*Wireless Engr*, Feb. 1951, Vol. 28, No. 329, pp. 51–53.) Mutual inductance between the cathode lead and grid and anode leads of a triode should be taken into account when calculating input conductance due to effective cathode-lead inductance. When this is done it is possible to neutralize input conductance by running leads correctly. For pentodes, positive input conductance due to grid/cathode capacitance can be neutralized by negative conductance due to grid/screen-grid capacitance without inserting an additional inductance in the screen-grid lead, especially in a single-ended valve. See also 4355 of 1938 (Strutt & van der Ziel).

621.385.5 : 621.396.619.14 **1805**

A Beam-Deflection Phase-Modulator Valve.—E. G. Hopkins. (*A.W.A. tech. Rev.*, Jan. 1951, Vol. 9, No. 1, pp. 53–66.) The intensities of two electron beams of rectangular section are independently modulated by voltages derived from two carriers in phase quadrature. The beams are deflected by a common deflection system which swings them across an electrode in which a series of apertures having the profile of a rectified sine wave are cut. Each aperture has an anode immediately behind it; alternate anodes are linked together and feed a balanced output circuit. A sine-wave modulation is thus impressed on the beams, and since the equivalent distance between their positions at any instant, expressed in terms of the sine-wave profile, is $\pi/2$ radians, the resulting output is a phase-modulated wave. Investigations with an experimental valve are described and improvements in its construction are suggested.

621.385.832 **1806**

Correction of Deflection Defocusing in Cathode-Ray Tubes.—J. E. Rosenthal. (*Proc. Inst. Radio Engrs*, Jan. 1951, Vol. 39, No. 1, pp. 10–15.) Formulae are derived which give the shape of the deflection plates for minimum spot distortion in tubes using e.s. deflection.

621.396.615.14.029.66 **1807**

Millimeter Waves.—Pierce. (See 1598.)

621.396.822 **1808**

Valve and Circuit Noise. Radio Research Special Report No. 20. [Book Review]—Publishers: H.M. Stationery Office, London, 19 pp., 9d. (*Wireless Engr*, March 1951, Vol. 28, No. 330, p. 97.) "This report of the Department of Scientific and Industrial Research provides a survey of existing knowledge and outstanding problems . . . A bibliography is included."

MISCELLANEOUS

621.3(083.74/.75) **1809**

Good Engineering Practice.—(*J. Brit. Instn Radio Engrs*, Jan. 1951, Vol. 11, No. 1, pp. 25–32.) A review of radio and electronic standards and specifications, prepared by the Technical Committee of the British Institution of Radio Engineers and based on a report by F. G. Diver and H. E. Drew. Specific references to numerous relevant published standards are listed in appendices.

621.396 **1810**

Radio Research, 1933–1948. [Book Notice]—Publishers: H.M. Stationery Office, London, 1950, 2s. (*Govt Publ., Lond.*, Dec. 1950, p. 21.) Report of the Radio Research Board for the period 1st Oct. 1933 to 31st Dec. 1948, with a survey of the investigations carried out during 1934–1947 and report of the Director for 1948.